NOVEXX SOLUTIONS

USER MANUAL

ALS 20x / ALS 256 / ALS 272

Labeler

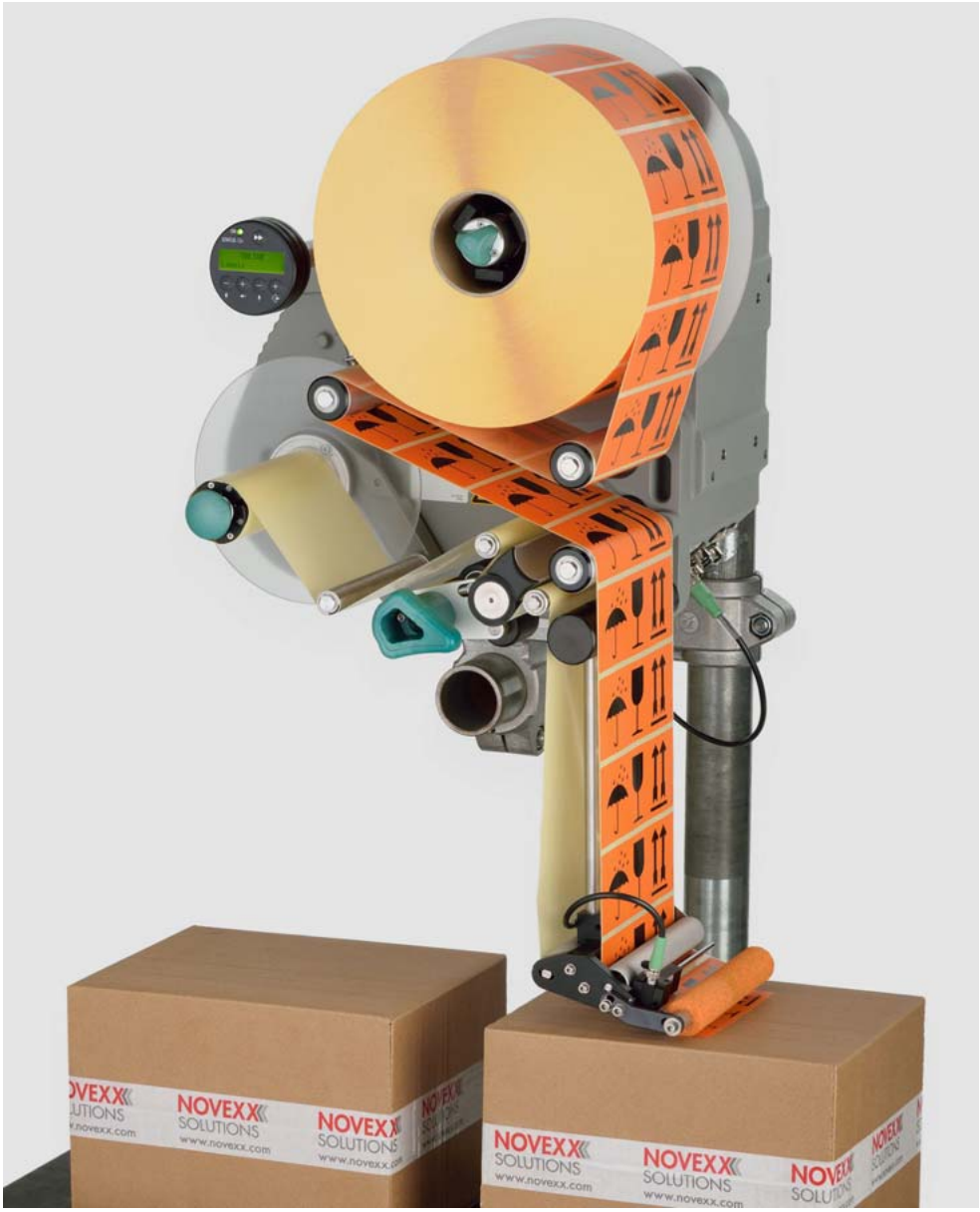

Edition 7 - 2/2019 - A104087 - Translation of original version

Contents

Please note

GENERAL NOTES

Validity and binding effect of this manual

Contents

The complete operating manual for the ALS 204, ALS 206, ALS 209, ALS 256 and ALS 272 labelers consists of the following parts:

Manual	Target group	Medium	Availability
User manual	Operating personnel	Printed	Comes with machine
Installation manual	Service personnel	User Docu-CD	
Service manual		PDF file	NOVEXX Solutions Partner Portal
Spare parts catalogue			

This operating manual refers exclusively to the machine types listed above. It is written for the purpose of ensuring professional usage and calibration of the unit.

Prerequisites for the use and adjustment are the professional installation and configuration of the unit.

– For information about the required qualification, see section Information and qualifications on page 10.
– For information about installation and configuration, see the service manual.

For any technical questions you may have that are not described in this manual, see:

➔ The service manual of the labeler

or

➔ Request a technician from one of our sales partners.

– Our sales representatives are available to assist you, particularly with configuring the unit as well as in the case of malfunctions.

Technical status

Technical state: 1/2019

Software version: 2.75

Liability

NOVEXX Solutions reserves the right:

– To make modifications to construction parts, components and software, as well as to employ comparable components in place of the parts specified, in keeping with technical advances.
– To modify information in this document.

No commitment will be made to expand these modifications to include any units delivered earlier.

Manufacturer

Novexx Solutions GmbH

Ohmstrasse 3

85386 Eching

Germany

Phone: +49-8165-925-0

Fax: +49-8165-925-231

www.novexx.com

Illustrations and descriptions

Signs and symbols

Various information types are indicated in different ways within the document in order to simplify readability and comprehension.

Sentences starting with an arrow are instructions and guidelines.

→ Perform the instructions one after another in the specified order.

The following information begins with a dash:

– Lists
– Mode descriptions
– Descriptions of prior steps
– Prerequisites for following actions

Dangers and risk notes

Important directions that you must absolutely observe are particularly emphasized:

WARNING!

A warning refers to risks that can lead to serious injury or death! The warning contains safety measures to protect the relevant persons.

→ Always follow the instructions.

CAUTION!

A caution indicates risks that can lead to property damage or injuries to persons (minor injuries). The caution note contains instructions for preventing damages.

→ Always follow the instructions.

Figures

Texts are accompanied by figures where necessary. Figures are indicated using figure numbers in [square brackets]. A capital letter after a figure number, for example [12A], refers to a specific section of the figure.

Generally, the labeler shown is a right-handed version. The left-handed version is only shown where it is necessary to differentiate between the two.

Button symbols

– The buttons of the control panel are depicted as symbols.
– The symbols are depicted with a '+' (PLUS SIGN) between them if more than one button is to be pressed. ↓ + ⇔

Functions

Functions are displayed in grey in the text with the following structure, MENU NAME > Function name.

Supplementary information

EXPERTS The expert symbol indicates actions that are only to be performed by qualified and specially trained personnel.

The information symbol indicates notes and recommendations, as well as additional information.

Equipment:

– Equipment, for example lubricants or cleaning agents

SAFETY INSTRUCTIONS

Information and qualifications

Ensure the required qualifications are met

➔ Ensure that only trained and authorized personnel operate, configure and service the unit.

➔ Only allow qualified and well-trained expert personnel or service technicians to perform configurations.

➔ The responsibilities with regard to operation, configuration and maintenance should be clearly defined and consistently maintained.

Qualification for operation

The instruction of personnel using the unit must ensure that:

– The operating personnel can use the unit on their own and safely.

– The operating personnel can remedy small operational disruptions on their own.

➔ At least two people must be instructed in the unit's usage.

➔ Enough label material must be provided for testing and instructional purposes.

Qualification for system integrators and service technicians („service personnel")

EXPERTS

Knowledge required to install the print dispenser and perform service work must be demonstrated through appropriate qualification. Only service personnel with technical training are able to assess the tasks to be performed and recognise potential dangers.

– Knowledge acquired through technical training in mechanics and electronics (for example in Germany the training to become a mechatronics engineer).

– Participation in a technical training course for the corresponding labeler offered by the manufacturer.

– The service personnel must be acquainted with the functionality of the labeler.

– The system integrator must be acquainted with the functionality of the of the system into which the labeler is being integrated.

Tasks	System integrator	Operator	Service technician
Install the machine	X		
Connect	X		
Make settings	X		
Switch on/off	X	X	X
Insert/change material/ribbon	X	X	X
Application-related settings	X	X	X
Rectify minor operating faults [1]	X	X	X
Clean the machine		X	X
Rectify major operating faults [2]			X
Settings to the electronics/ mechanics			X
Repairs			X
Manual:	Service manual	Operating Manual	Service manual, spare parts catalogue

[Tab. 1] An example of the distribution of tasks among different qualified personnel

1) For example faults when detecting labels
2) For example incorrect labelling

Follow the instructions

WARNING!

Safe and efficient operation of the labeler can only be guaranteed if you observe all necessary information.

→ Before operating the unit, read the operating instructions and all other notes carefully.

→ Observe the additional safety and warning notes on the labeler.

→ Only permit competent people to operate and configure the labeler.

Product liability and warranty claims can only be asserted if the unit was operated in accordance with the directions in the manual.

Operational safety of the unit

Proper usage

The labeler described here is designed for dispensing and applying pre-printed self-adhesive labels to products or packages.

The label material that is used must be punched and in roll shape. Punched means that the labels adhere individually, separated by punchings, on a carrier material. The labels must only adhere strongly enough so that they will come loose when the material is deflected over a sharp edge.

Usually, the labeler is integrated into a superordinate system, e.g. a packaging system, by a system integrator. The labels are typically attached to products, which are moved by by an automatic conveyor.

Any other type of or more extensive application will be considered non-intended use.NOVEXX Solutions shall assume no liability for damage resulting from non-intended use of the machine.

The system integrator must install the machine with suitable equipment to protect operating personnel from danger; for example, the danger of the hands or fingers being crushed by reaching in between the product and the dispensing edge.

WARNING!

Improper usage of the unit can cause accidents, property damage and production downtime!

→ Only use the unit in accordance with the instructions specified in this manual.

→ Do not operate the unit without the required safeguards.

→ Only configure the unit in accordance with this manual and with the required care.

→ Only use original accessories.

→ Do not make any modifications or alterations to the unit.

→ Repairs to the device may only be performed by authorised specialists who are aware of the risks involved.

Protection against injuries by electrical current

⚠	WARNING!
	The machine operates using mains voltage! Touching live electrical parts may expose you to hazardous electrical currents and may lead to burns. ➔ Only operate the unit once the housing has been reassembled properly. ➔ The machine may only be connected by authorised specialists, who are aware of the risks involved. ➔ Only link the unit to devices that fulfil the SELV (safety extra-low voltage) circuit requirements specified in EN 60950. ➔ Make sure that the power switch at the machine is accessible.
	The unit is not protected against splashing water in its standard model [1]. ➔ Keep the unit dry. ➔ Before cleaning, switch off the unit and remove the power cable from the socket. ➔ If liquids have penetrated the unit, switch it off and disconnect or unplug the power cable immediately. Inform a service technician.
	The device is *only completely* disconnected from the mains if the power cable is unplugged. ➔ Make sure the power supply socket is accessible. ➔ In case of emergency, switch off the device and disconnect the power cable.

1) Exception: Machines with special equipment for dust/splash protection are protected against splashing water.

CAUTION

A too high or low supply voltage can damage the unit.

➔ Only operate the device using the system voltage indicated on the nameplate.

➔ Ensure that the mains voltage set on the unit is the same voltage as that provided by the electricity supplier.

Protection against injuries by mechanical action

⚠	WARNING!
	Risk of injury due to moving and rapidly rotating parts! ➔ Maintain a safety clearance from the machine when it is in operation. ➔ Never reach into a machine that is running. ➔ Switch off the machine before making any mechanical settings. ➔ Keep clear of the area around moving parts even when the machine is stopped if there is any possibility of the machine starting up.
	Dancer levers work by spring tension and may snap back if the track tension of the label material suddenly decreases. ➔ Always keep clear of the range of motion of the dancer levers.
	Entanglement hazard! ➔ When working in the vicinity of machines in operation, do not wear ties, loose clothing items, jewellery, wrist watches or similar objects on your body. ➔ Long hair must be kept in a hair net and must not be worn loose.
	Crushing hazard on the dispensing edge due to products on the conveyor equipment! ➔ Never reach between the product and the dispensing edge while the unit is in operation or ready for operation. ➔ Never reach behind the safety guard or remove it while the unit is in operation.
	Tripping hazard! ➔ Lay the connection cable and pneumatic hoses (if fitted) so that no one can trip over them.
	Danger of injury caused by falling label roll! ➔ Wear safety shoes.
	In applicator mode: Danger of crushing between dispenser edge and applicator pressure plate due to applicator movement! ➔ The applicator must only be operated with higher-level protective equipment [1]. ➔ If the machine is running or ready for operation, never reach between the applicator and the dispensing edge. ➔ Never remove or bypass the protective equipment to prevent reaching in while the machine is in operation.

1) Movable, locked, separating protective equipment (EN 953)

Warning notes on the unit

CAUTION!

Warning notes on the unit represent important information for the personnel using it.

➔ Do not remove warning notes.

➔ Replace any missing or illegible warnings.

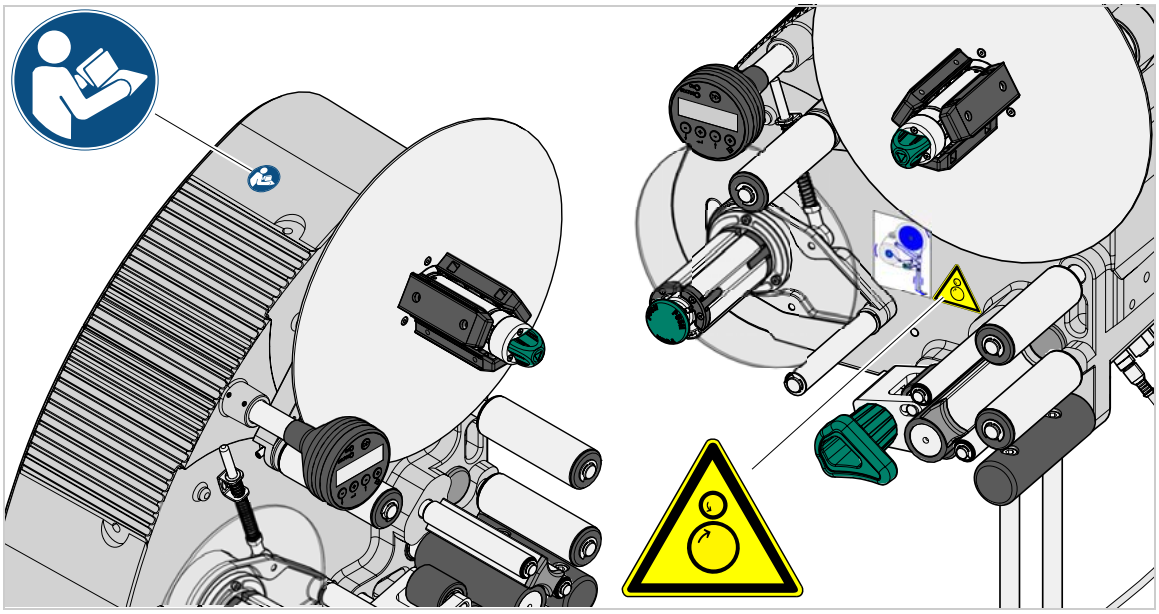

[2] Position of the warning notes on the machine.

Warning note	Meaning	Article no.
	The ‘Pinch Point’ warning note warns you of the danger posed by the machine’s rotating parts; they can trap items and draw them in.	A5346
	The blue label ‘Read manual’ demands that users read the unit instructions.	A5331

[Tab. 3] Meaning of the warning notes.

Product description

OVERVIEW

Design models

ALS 20x/256/272

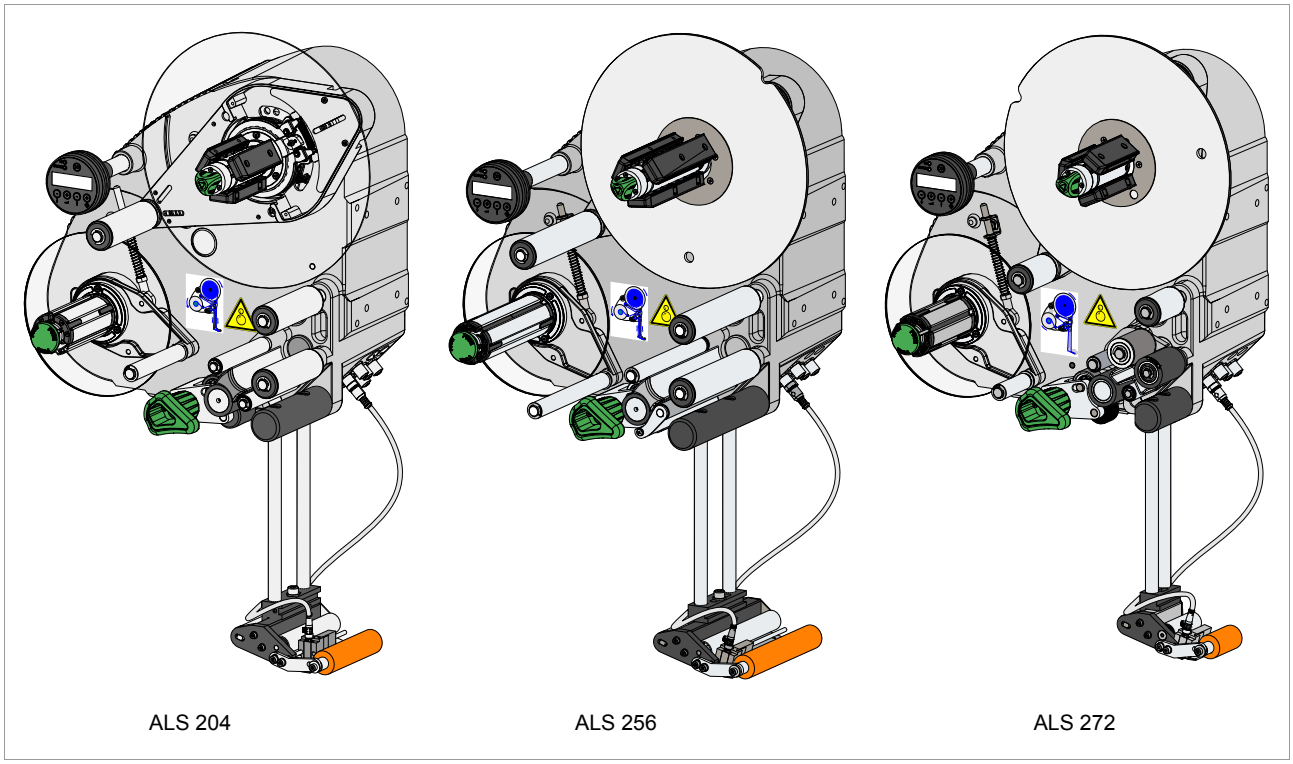

[4] Comparison of the three versions of the ALS 2xx.

- ALS 20x (ALS 204/206/209) differ only in the width (4“/6“/9“)
- ALS 256 have the same width (6“) as ALS 206, but dispense with a higher speed
- ALS 272 suits for very narrow label material (2“) that is supposed to be dispensed very fast

RH/LH

Each of the ALS 20x, ALS 256 and ALS 272 label dispensers are available as right-hand (RH) or left-hand (LH) version.

– ALS 2xx RH: The label exits the machine on the *right*[1]
– ALS 2xx LH: The label exits the machine on the *left*

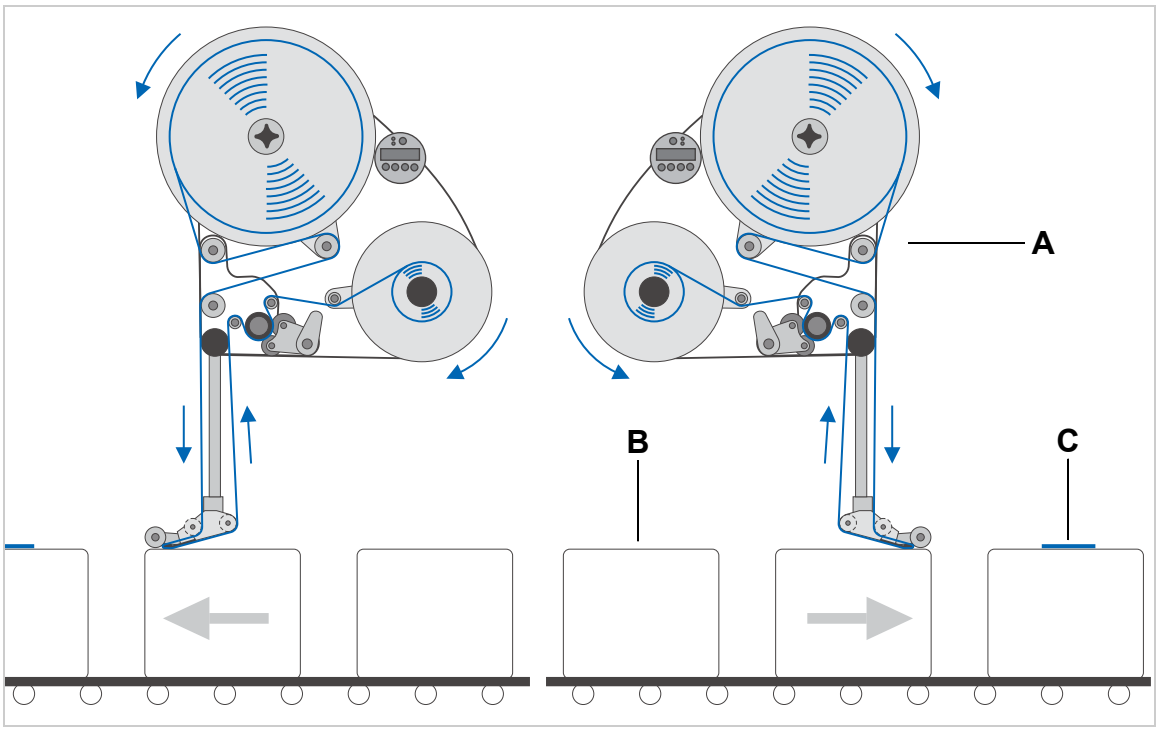

[5] Left: Left-handed version; Right: Right-handed version
A ALS 20X
B Product on the conveyor belt
C Labelled product

The label dispenser operation described in this manual is based on the right-handed version. The left-handed version is only taken into account if the explanations or figures of the designs differ significantly.

1. Looked at from the operator´s side

Mode of operation

In labelling mode, the strip is first pulled from the label roll around the dancer arm [6A], which consistently maintains even tension in the label strip. The feed roller [6D] behind the dispensing edge [6C] draws the strip across the dispensing plate. The label is unfixed from the backing paper on the dispensing plate and is pressed onto the product by the pressure roller [6B].

The feed roller drives the label strip forwards the length of one label and stops until the next product arrives at the dispensing plate. The strip feed is started by the product sensor mounted on the conveyor belt. The stop control provided by the label sensor on the dispensing edge ensures the feed is halted as soon as a gap is detected between two labels.

The spent backing paper runs from the dispensing edge around the drive roller [6D] to the rewinder [6E]. The dancer arm regulates the rewinding speed.

The entire operation of the label dispenser is controlled and monitored electronically. If errors occur, the device controls output an appropriate notification for the operator. If necessary, the labelling operating mode is halted automatically. An electronic signal is output at the same time. The signal can be fed to an external controller and evaluated.

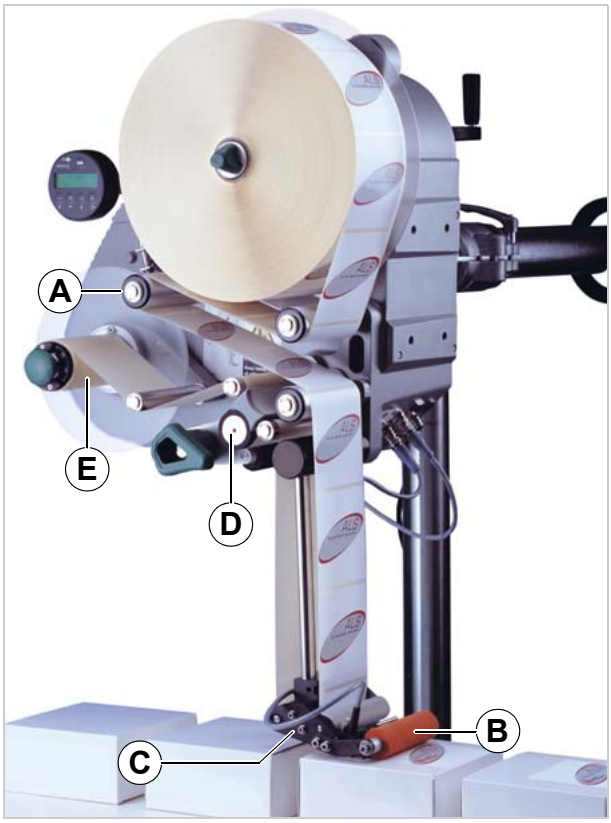

[6] The ALS 204 Label Dispenser is ready for operation in idle mode.
A Dancer arm
B Pressure roller
C Dispensing edge
D Drive roller
E Rewinder

Operating components

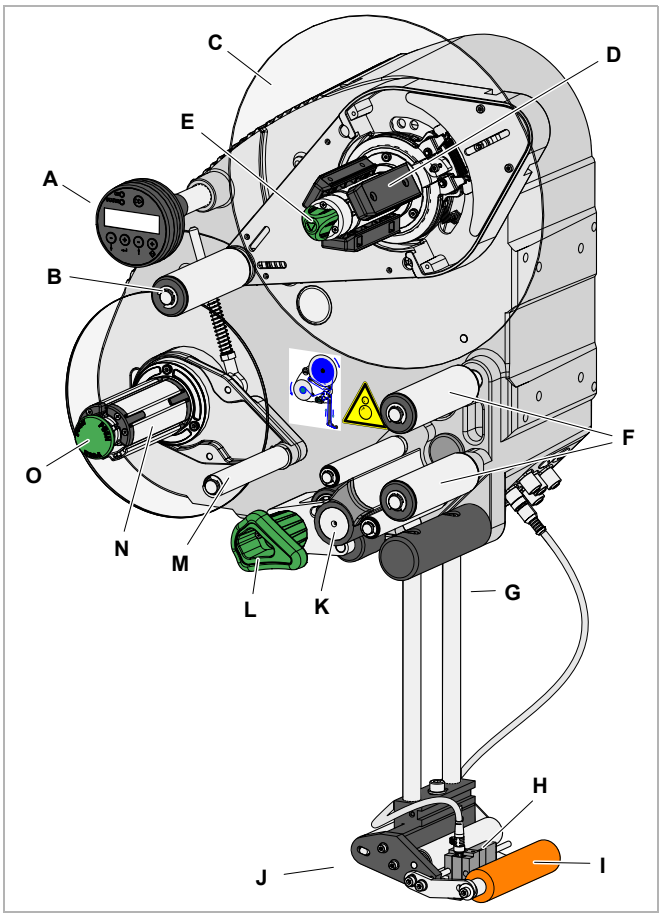

[7] Operating components at the ALS 204 RH.

The operating components described here are equal at all ALS 2xx versions.

A Control panel

– For sending commands to the device and for displaying operating states and error messages.

– An optional external control panel can also be connected to the device.

B Dancer arm

– Keeps the label material stretched tight evenly.

– Arrests the rotation of the material roll if tension diminishes.

C Dispenser

– Dispenser mandrel grasps the label roll.

D Core diameter adapter

– For adjusting the diameter of the dispenser mandrel to match the core diameter of the label roll.

E Adjusting knob

– Turning this in a clockwise direction secures the label roll on the dispenser.

F Deflection rollers

G Dispensing edge bracket

H Label sensor

– Stops the label feed after a label has been dispensed.

I Pressure roller

– Prints the label once it is stuck to the product.

J Dispensing edge

– Standard: (non-adjustable) L-shaped dispensing edge

– The following options are available: V-shaped dispensing edge, adjustable L-shaped dispensing edge, spring-loaded L-shaped dispensing edge, pneumatic L-shaped dispensing edge

K Drive roller

– Drives the label material forwards.

L Pressure mechanism

– Presses the pressure roller against the drive roller.

– Prevents the backing paper from slipping through.

– Releases automatically once the backing paper has been drawn around the drive roller.

M Dancer arm

– Controls the rewind speed.

N Rewinder

– Rolls up the used backing paper.

O Release button

– Pressing this button reduces the diameter of the rewinder core.

– Allows the easy removal of the rewound backing paper.

Control panel

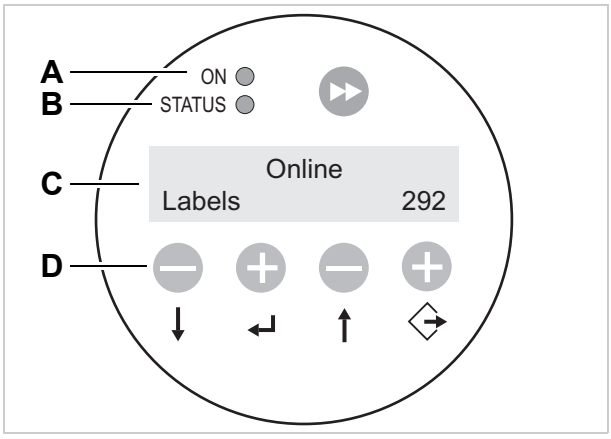

[8] The ALS 2xx control panel (in dispensing mode)
A Operating LED
B Error LED
C LCD display
D Buttons

Operating LED

Lights up green when the device is switched on.

Error LED

Lights up red when an error occurs.

LCD display

– Displays functions, configured values, operating states and error messages.
– What is displayed at any one time depends on the operating status of the device; these screens are explained in the section Operating modes on page 33.

Buttons

The functions of the buttons depend on the operating status of the device; these functions are explained in the section Operating modes on page 33.

Language

– The display language can be selected from a choice of seven languages.
– Default setting is English
– For selecting another language see chapter Functions on page 36

Connection arrangement

Connections on the back of the device

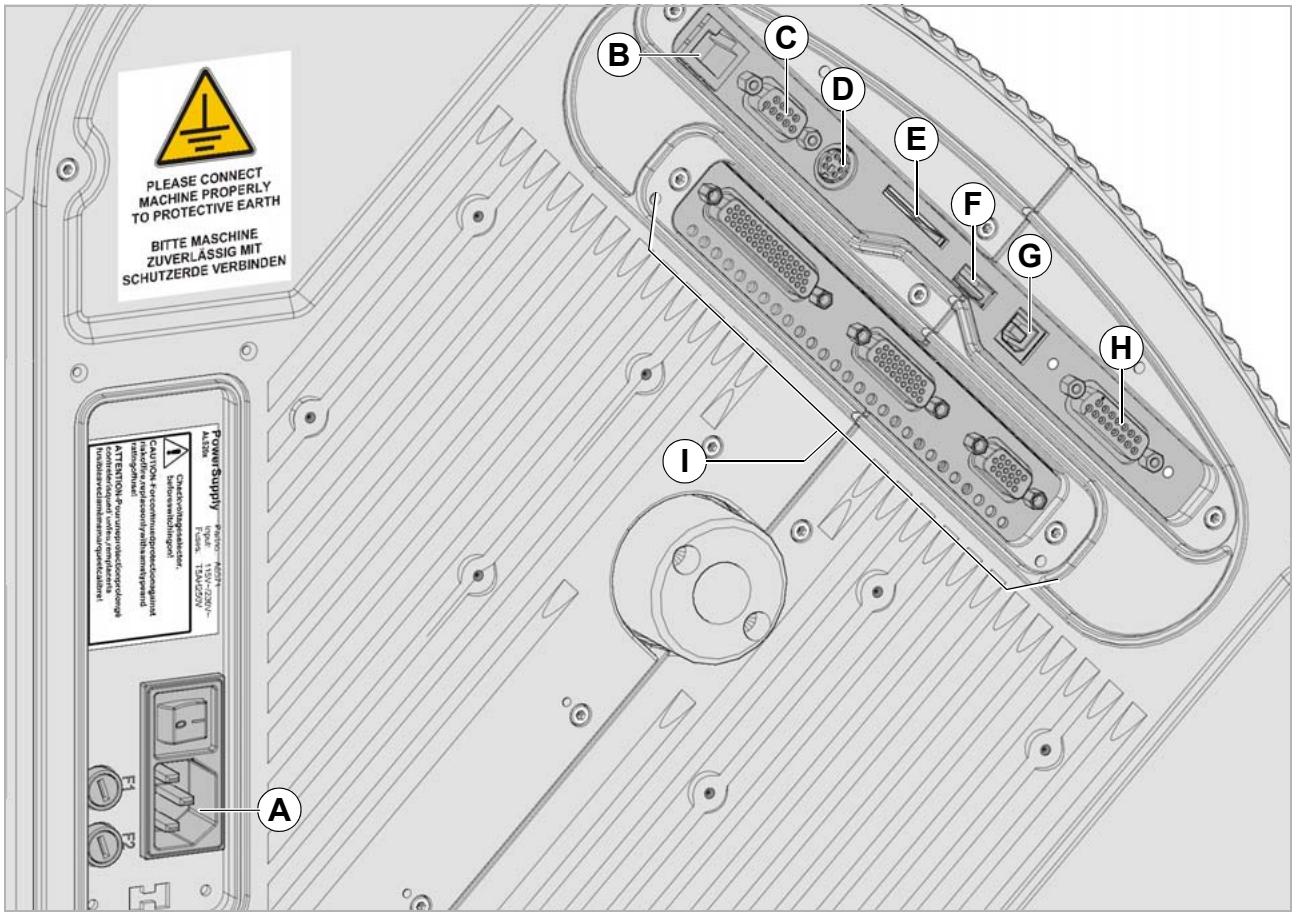

[9] Connections on the back of the device (example: ALS 20x)

A Power supply connection
B Network connection (Ethernet 10/100) [1]
C Serial interface (RS232) [1]
D Connection for external control panel (RS485)
E Plug-in card slot (SD/MC cards) [3]
F USB-A (host) interface (USB stick)
G USB-B (device) interface [1 3]
H PLC signal interface [2]
I Optional: Applicator interface [2]

1) Connection to a host; used to read/write service data; transfer firmware; operation via web server (only with Ethernet)
2) Used to exchange signals with other machines or control an applicator.
3) Interface is not yet supported by the current firmware version

For information on connecting the unit, see section Power supply connection on page 44.

Sensor connections

[10] Sensor connections on the ALS 20x (RH)

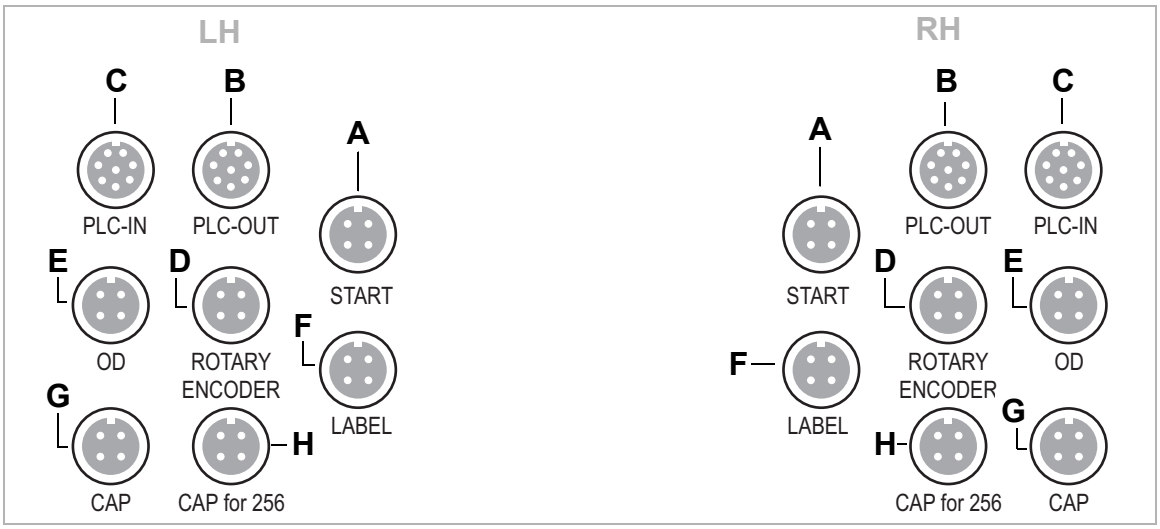

[11] Arrangement of the sensor connections (schematic) on the LH (left) and RH (right) devices:
- **A** Product sensor
- **B** Signal outputs (optional)
- **C** Signal inputs (optional)
- **D** Rotary encoder (for automatic speed adaption)
- **E** Roll diameter sensor
- **F** Label sensor
- **G** (ALS 20x/ALS 272) Alternative label sensor
- **H** (ALS 256) Alternative label sensor

For information on connecting the sensors, see section Connecting sensors on page 46.

TECHNICAL DATA

Characteristics

Dispensing speed [1]:	
ALS 204	max. 40 m/min
ALS 206	max. 30 m/min
ALS 256	max. 50 m/min
ALS 209	max. 25 m/min
ALS 272	max. 70 m/min
Labelling halt precision at the *peeling edge*:	
At *fixed* dispensing speed [2]	±0.5 mm
At *variable* dispensing speed	
ALS 272	±0.5 mm
all other machines	±1 mm
Labelling halt precision on the *product* [3]:	
At *fixed* dispensing speed [2]	
ALS 272	±1 mm
Speed control:	Fixed setting or automatic speed adaption (APSF) via rotary encoder [4]

1) The maximum usable dispensing speed depends on the label geometry.
2) At a dispensing speed range of 5 m/min to the max. speed in steps of 10 m/min.
3) Tested with L-shape dispensing edge on blocks on a conveyor.
4) APSF doesn´t work with pneumatic dispensing edge.

Labels

Label material:	Converted self-adhesive label material with liner
Internal rewinding	yes
Material width (including backing paper)[4] :	
ALS 204	10-110 mm [5]
ALS 206	10-160 mm [6]
ALS 256	10-160 mm [6]
ALS 209	50 -229 mm
ALS 272	10-53 mm [6]
Label length:	5 to 1000 mm
Distance between labels on the carrier material:	min. 1 mm
Label roll:	
Winding direction	Labels inside or outside
Dispenser (outer) Ø:	up to 300 mm
Rewinder (outer) Ø:	up to 200 mm
Core (inner) Ø:	38.1 / 76.2 / 101.6 mm (1.5 / 3 / 4 ")

4) Depending on the dispensing edge width.
5) Minimum material width for material with PET liner: 30 mm
6) Minimum material width for material with PET liner: 50 mm

Label sensor

Distance to peel edge	
L-shape dispensing edge:	19 mm
V-shape dispensing edge (ALS 204):	77 mm
Sensor type:	Transmission sensor; NPN/PNP (switchable)

Power supply

System voltage:	
ALS 20x	110 V (AC) at 60 Hz power frequency (permissible tolerance ±10%) 230 V (AC) at 50 Hz power frequency (permissible tolerance ±10%)
ALS 256/ALS 272	100-240 V (AC) at 50-60 Hz power frequency (permissible tolerance ±10%)
Power consumption:	
ALS 20x	max. 460 VA
ALS 256/ALS 272	max. 560 VA
Fuses:	
ALS 20x	F1, F2: T5AH 250 V [7]
ALS 256/ALS 272	Fuses integrated in the power supply [8]

7) For more information on fuses, see section Replacing fuses on page 65.
8) Not accessible for user or service technician.

Electronics

Processor:	ARM926-EJ CPU, 32 Bit, 400 MHz
RAM:	128 MBytes DDR2
ROM:	8 MBytes
Slot for memory card:	1x SD
Realtime clock:	n. a.
Control panel:	Graphical display with 128 x 32 pixels, 2/4 lines, 5 buttons

Interfaces

Sensor interfaces for external sensors	(plug in each case 4-pin M12)
Label sensor:	NPN, 24 V
Alternative label sensor:	PNP/NPN, 24 V
Product sensor:	PNP/NPN, 24 V
APSF-sensor (Rotary encoder):	single-phase/two-phase, PNP/P-P, 24 V, max. 20 kHz
Stock sensor:	PNP, 24 V
Internal sensor interfaces:	
Material unwider	Light barrier
Pressure roller	not used
Dancer arm	bi-phase light barrier encoder
PLC interface	Sub D15, optically insulated, optionally via two 8-pin M12 (separate inputs/outputs in each case)
Outputs:	4x PNP, 24 V, a maximum of 500 mA/channel, total permissible output current: 1500 mA
Inputs:	3x PNP/NPN, 24 V
Data interfaces:	
Serial:	RS232C (Sub-D9), max. 115 200 Baud
Ethernet:	10/100 BaseT (RJ45)
USB:	Device V1.1, USB B, ‘Full speed’ operating mode, 12 MBit/s [9]
	Host, USB-A
Memory cards:	Slot for 1 SD card [9]
Control panel interface:	RS 485 (Mini DIN 6 connection) for remote control

9) Not yet supported with the current firmware version

Internal Interfaces

Applicator Interface	Connection for Applicator Interface (AI) board (special equipement)
Connector for additional motor driver	not used

Status messages, test functions, product profiles

Automatic halt, if	... the label roll is spent or no gap was found.
	...the max. admissible number of missing labels is reached.
Test functions:	Automatic diagnostics check when switched on
	Output of system data via data interface

Status indicators:	Label counter Operating hours counter
Storage locations for product profiles:	up to 16

Dimensions

Width x height x depth: [10]	
ALS 204	492 x 488 x 371 mm
ALS 206	492 x 488 x 402 mm
ALS 256	492 x 488 x 402 mm
ALS 209	492 x 488 x 505 mm
ALS 272	492 x 488 x 352 mm
Weight:	
ALS 204	36 kg
ALS 206	38 kg
ALS 256	40 kg
ALS 209	41 kg
ALS 272	31 kg

10) Measurements without the dispensing edge bracket and dispensing edge

Ambient conditions

Installation location:	Inside buildings Protected from wind and spray water Dry Not in areas with potentially explosive atmosphere
Operating temperature:	5 to 40 °C
Humidity:	30 to 85%, (non-condensing)
Noise (at a distance of 1 m):	72 dB(A)
Protection class:	ALS 20x: IP 41 (IP 65 with special equipment[11]) ALS 256/ALS 272: IP 21
Sea level:	Operation to max. 2000 m above sea level

11) With dust/splash guard option installed

Integration

Mounting positions:	side / bottom / rear
Labelling positions:	top / side / bottom
Dispensing edges:	V-shape (ALS 204) L-shape fixture 90° pivoting

Certificates/Markings

- CE, TÜV-Mark, FCC, CCC, EAC, $_{C}$TÜV$_{US}$-Mark
- The *regulation EN 55032* demands for class A devices the following text to be printed in the manual:

  „WARNING: This is a class A product. In a domestic environment this product may cause radio interference in which case the user may be required to take adequate measures.“
- The *FCC regulation* demands the following information text for class A devices:

  „NOTE: This equipment has been tested and found to comply with the limits for a Class A digital device, pursuant to Part 15 of the FCC Rules. These limits are designed to provide reasonable protection against harmful interference when the equipment is operated in a commercial environment. This equipment generates, uses and can radiate radio frequency energy and, if not installed and used in accordance with the instruction manual, may cause harmful interference to radio communications. Operation of this equipment in a residential area is likely to cause harmful interference in which case the user will be required to correct the interference at his own expense“

OPTIONS

External control panel

- An external control panel can be connected in addition to the integrated control panel.
- An external control panel is useful if the standard control panel is difficult to access due to the position in which the unit is installed.

[12] External control panel

Fixed dispensing edge

- The dispensing edge has a fixed connection to the brackets.
- To adjust the vertical position, lift/lower the entire device.
- The slope angle can be adjusted by rotating the brackets (see the service manual for further details).

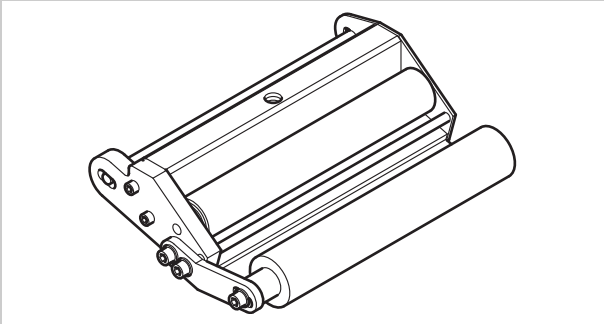

[13] Standard dispensing edge

Swivelling dispensing edge

- The position of the dispensing edge can be adjusted vertically.
- The device need not be moved to adjust the position of the dispensing edge; the device's mounting need not be dismantled.

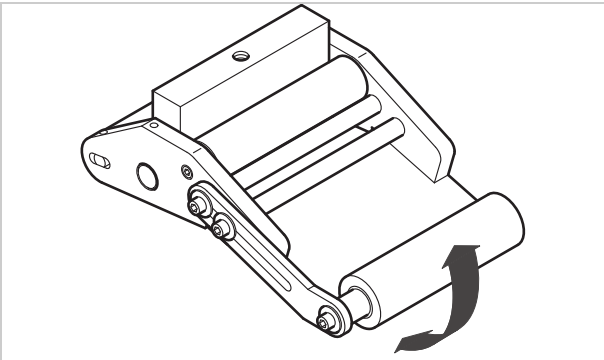

[14] Swivelling dispensing edge

Spring-loaded dispensing edge

- The dispensing edge is pivoted. A torsion spring in the dispensing head presses the dispensing edge downwards and onto the surface of the product.
- Allows compensation for height differences between the products or on the product surface.

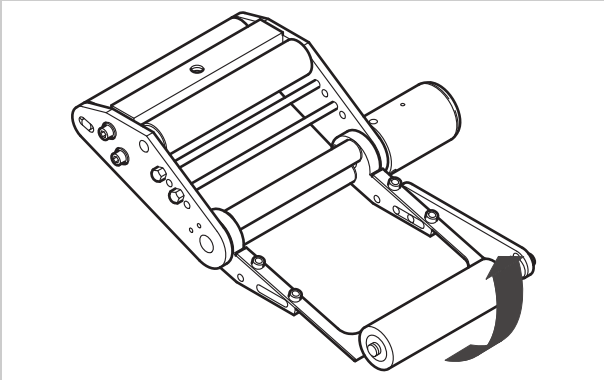

[15] Spring-loaded dispensing edge

Pneumatic dispensing edge

- The dispensing edge is pivoted in the dispensing head. Compressed air presses the dispensing edge onto the surface of the product.
- Allows compensation for height differences between the products or on the product surface.

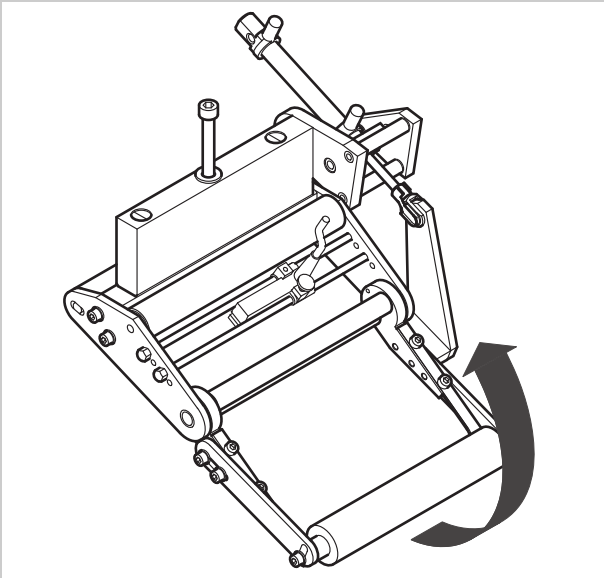

[16] Pneumatic dispensing edge

V-shape dispensing edge

- An alternative for applications which do not leave enough space for the standard dispensing edge holder, which juts out to the bottom side.
- Is attached directly to the machine

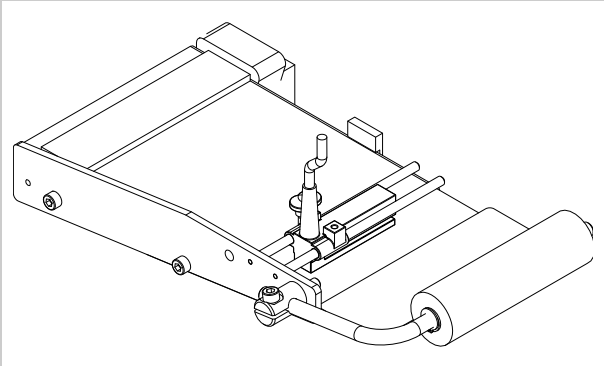

[17] V-shape dispensing edge

Adjustable dispensing edge holder

Enables a vertical fine adjustment of the dispensing edge towards the product without moving the machine [18A].

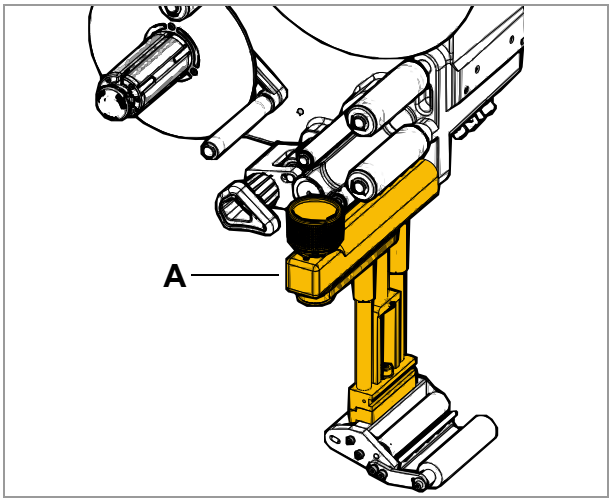

[18] Adjustable dispensing edge holder (A)

Outer Diameter control sensor

The outer diameter control sensor [19A] (OD sensor) triggers a warning, if the label roll outer diameter falls below a certain, adjustable value.

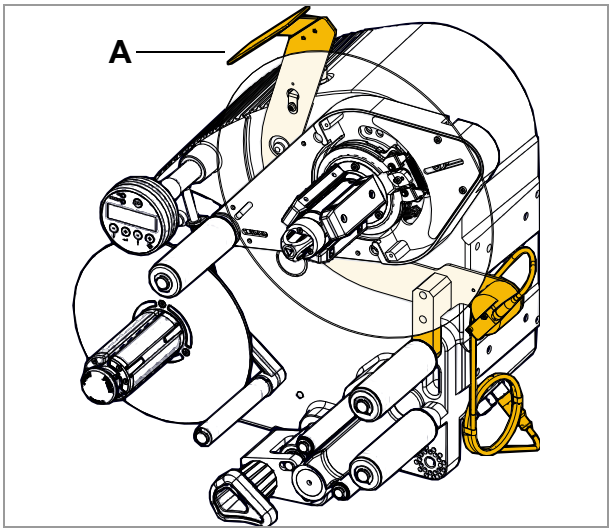

[19] OD sensor (A)

Dust/Splash guard

Only for ALS 20x.

Additional sealing of the electrical connections and of the housing fulfils the requirements of the IP65 protection class [20A].

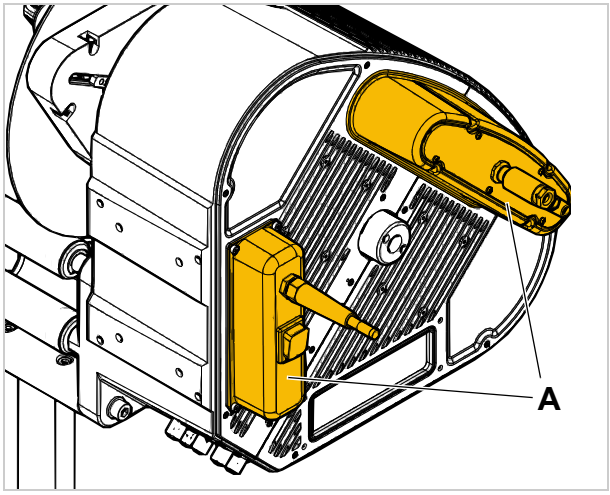

[20] Dust/splash guard of the electrical connections (A)

Additional material guide disk

The additional material guide disk [21A] improves the lateral guiding of the material roll. This option is especially recommended, if very narrow material (< 30 mm width) is processed.

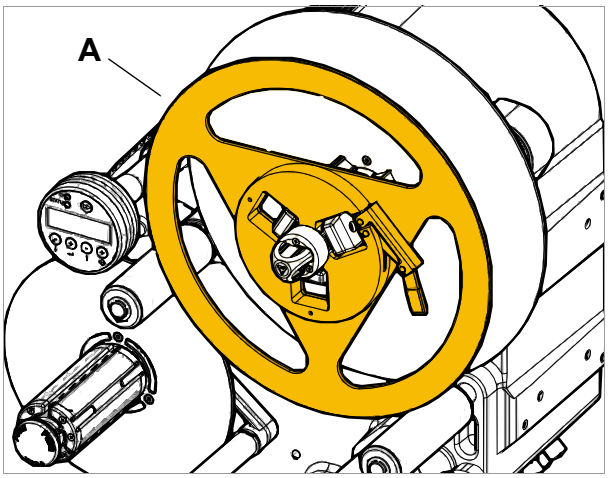

[21] Additional material guide disk (A)

Capacitive label sensor

Optional sensor, required for processing transparent labels [22]. The sensor is mounted to the rods of the dispensing edge holder.

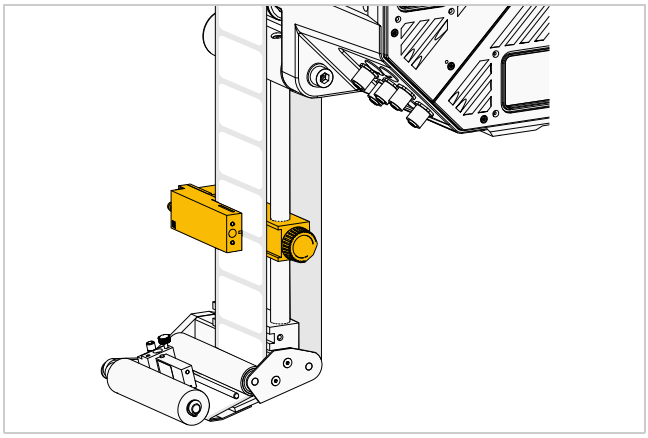

[22] Capacitive label sensor.

Printer

- If necessary, you can mount a hot stamp printer (not available from NOVEXX Solutions) onto the holder brackets of the dispensing edge.
- Example of use: Printing consecutive numbers onto labels.

Applicator

If it is not possible to label directly from the dispensing edge, you can fit an applicator to the label dispenser. Various types of applicators are available that depend on the given requirements.

Simple applicators can be controlled directly via the PLC signal interface [9G] that is available as standard.

Applicator interface

Additional board [23]; allows almost all types of applicators to be controlled.

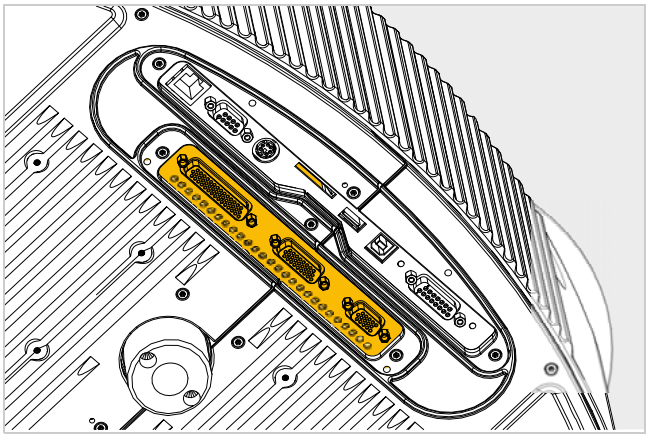

[23] Applicator interface.

Narrow label spring kit

Narrow label material may under certain circumstances tear off or expand in a way which results in poor labelling precision. In those cases, it is adviseable to install weaker dancer arm springs.

Splice table

With the splice table option, the end of the preceding material roll can be taped to the beginning of the new roll. Thus, the material doesn´t have to be fed through the whole machine for each new material roll, what reduces the downtimes for material change.

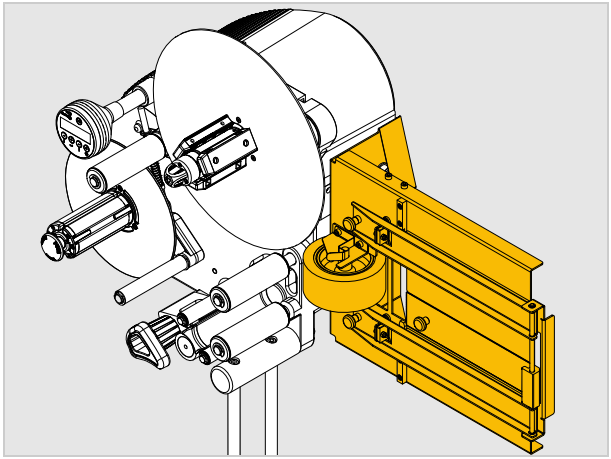

[24] ALS 204 with splice table

Signal beacon

The signal beacon signals error (red), warning (yellow) or ready (green) status. Ready to use connection cables for different interfaces are also available.

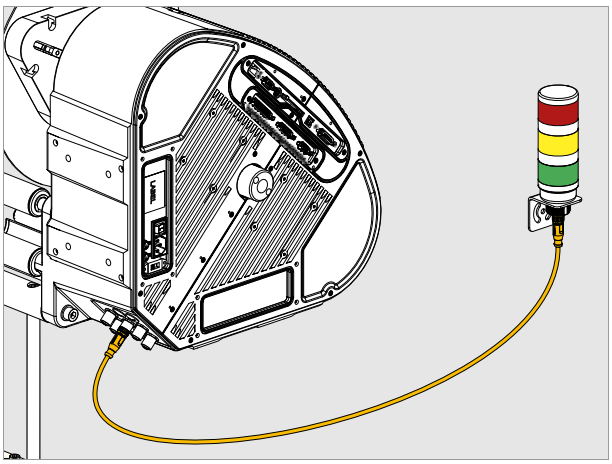

[25] Signal beacon

OPERATING MODES

Dispensing mode

This is the operating mode of the unit when switched on. You can carry out the functions listed in the sections below.

If text such as 'Prof 5 xxxxxxxx' is displayed instead of 'ONLINE':

- The 'xxxxxxxx' product profile (memory location 5) is activated.
- For more information, see chapter Using product profiles on page 62.

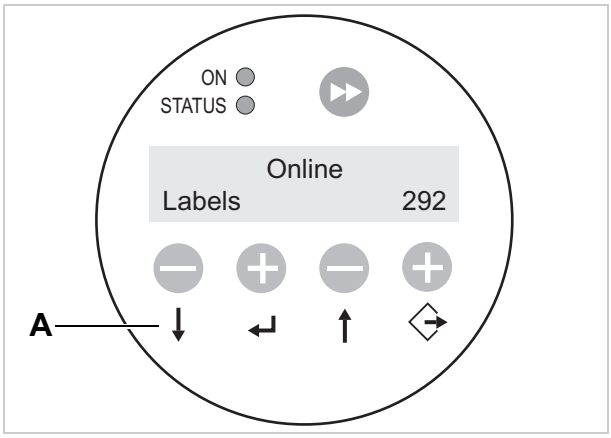

[26] Control panel in dispensing mode (292 labels dispensed)
A Explanation of buttons in dispensing mode

Stopping / Continuing the dispensing

Stopping the dispensing:

→ Press the ↵ button.

– The dispenser stops.

– Displayed text (Second line = scroll text):

ONLINE
Stopped . press ^ key to start

Continuing the dispensing:

→ Press the ↑ button.

Changing the counter reading

→ Set the counter reading using the MACHINE SETUP > Dispense counter function.

Resetting the counter reading

→ Set MACHINE SETUP > Disp. Cnt. Reset = „Yes".

Starting the unit in configuration mode

To start the unit in configuration mode:

→ Set MACHINE SETUP > Turn-on mode = „Offline".

Counting labels backwards

To count dispensed labels backwards from a starting value to zero:

→ Set LABEL SETUP > Stop count. mode to „Enabled".

→ Use the LABEL SETUP > Label stop quan. function to define the starting value.

Online settings

The machine is in dispensing mode.

To switch to the online settings mode:

➔ Press the button.

– The display shows the dispensing speed [27A] and the start offset [27C].
– The button assignments are as shown *on the buttons*.
– You can increase ('+' button) or lower ('–' button) both settings in the dispensing mode [27D].

Dispensing speed:

– Setting range:
  ALS 204: [1.0…40.0] m/min
  ALS 206: [1.0…30.0] m/min
  ALS 256: [1.0…50.0] m/min
  ALS 209: [1.0…25.0] m/min
  ALS 272: [1.0…70.0] m/min
– Display *fix*: The dispensing speed is constant.
– Display *var*: The dispensing speed automatically adjusts to the speed of the conveyor belt ('speed adaption').

Start offset:

– Setting range: [15.0…999.9] mm
– The start offset indicates the distance between the product sensor and the dispensing edge.

Dispensing manually

– To manually trigger the dispensing of individual labels:

➔ Press the button.

– Dispensing speed: As specified in the setting (see above).

To switch back to dispensing mode:

➔ Press the buttons ↓ + .

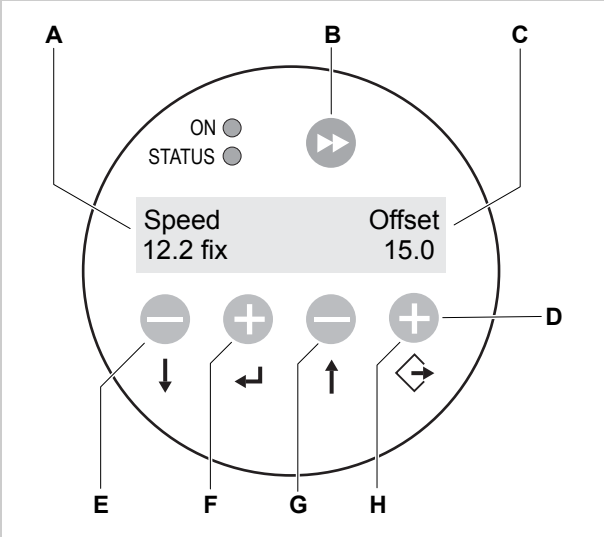

[27] Control panel in the online settings mode
A Dispensing speed display (here: 12.2 m/min constant)
B Dispense label button
C Start offset display (here: 0 mm)
D Explanation of buttons in online settings mode
E Button to lower dispensing speed
F Button to increase dispensing speed
G Button to lower start offset
H Button to increase start offset

Configuration mode

The machine is in dispensing mode.

Switching to configuration mode:

➔ Press the button twice.

– Display:

OFFLINE

➔ Press the button.

– Display:

LABEL SETUP

– LABEL SETUP is the name of the first menu that is currently active.

– In configuration mode, the button assignments are as shown *below the buttons*.

Function of the double-arrow button

To dispense individual labels:

➔ Press the *button briefly* (less than two seconds).

– Dispensing speed: As specified in the configuration; 'Speed Adaption' is not active.

To automatically calibrate the label length:

➔ Hold down the button for a while (longer than two seconds).

Menus

In configuration mode, you have access to several menus providing a fixed sequence of functions that can be carried out.

You can set the unit so that some of the menus are not shown.

Figure [28] shows the button functions for switching between the individual menus and for leaving them.

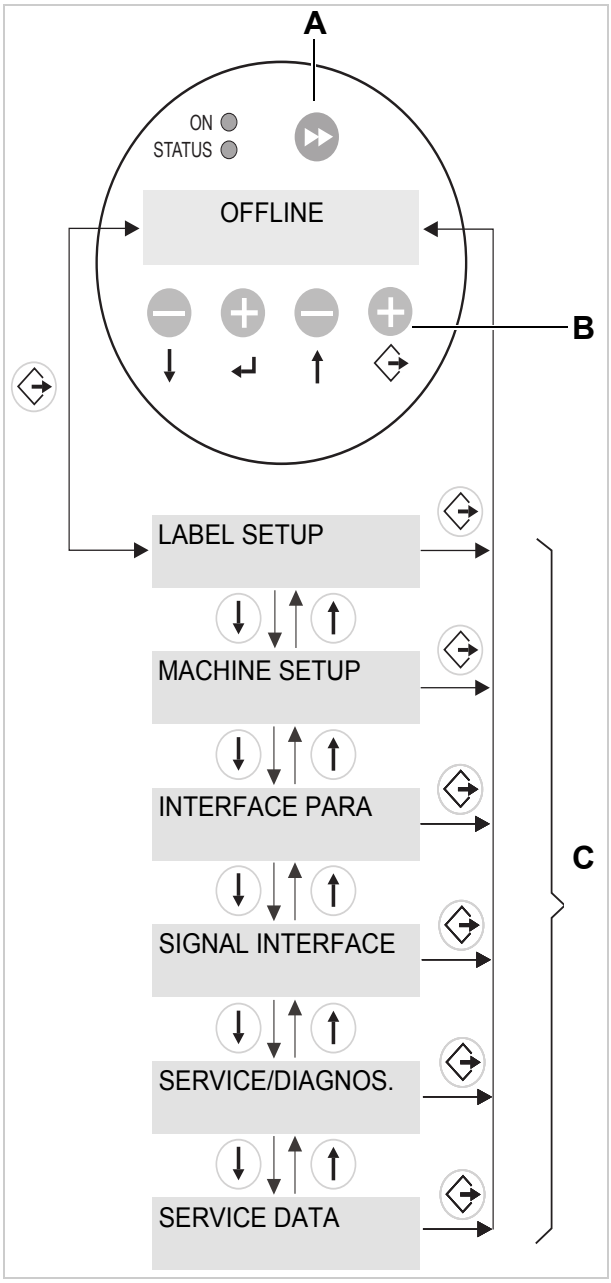

[28] Menu selection and button functions in configuration mode.
A Button for triggering a dispensing procedure and for starting the measurement of lengths.
B Explanation of buttons in configuration mode
C Menus

Functions

Every submenu contains functions for setting the unit controls.

Figure [29] shows the button functions for changing settings using the MACHINE SETUP > Language function as an example (English is the preset language, so you most probably don´t have to change this setting. Anyway, the example shows how to set „German“ as display language).

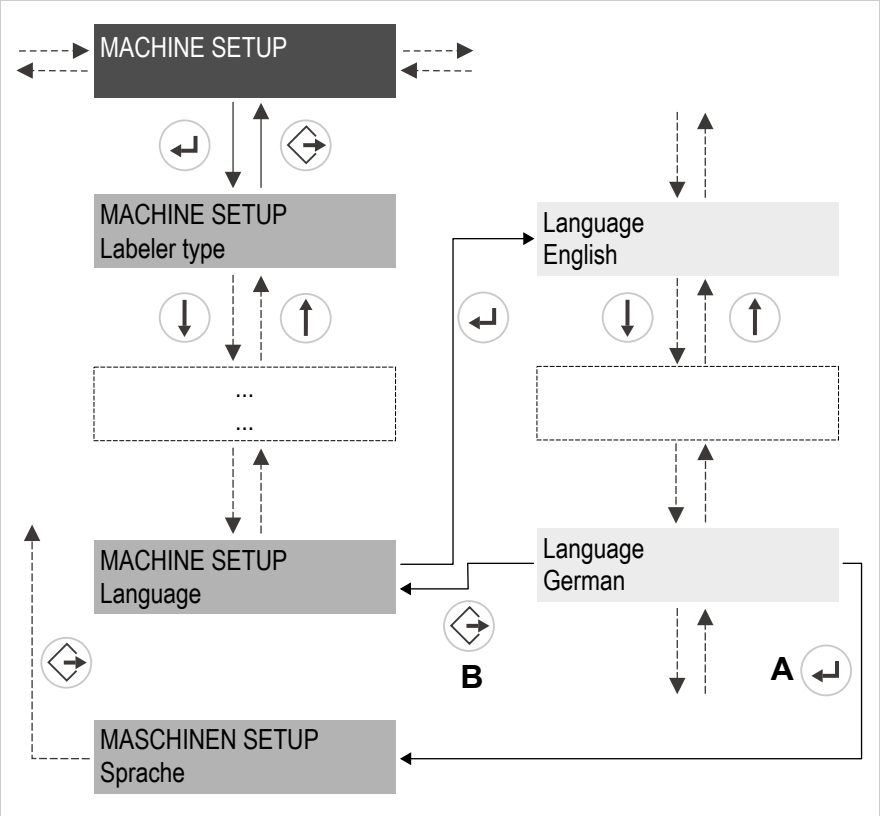

[29] Button functions for setting the MACHINE SETUP > Language function.
A Button to ‘Accept changes’
B Button to ‘Cancel changes’

FUNCTION DESCRIPTIONS

Overview of functions

LABEL SETUP	MACHINE SETUP	(continued)	INTERFACE PARA	(continued)
Load prod.profil	Dispenser type	Labelsen. InType	>EASYPLUGINTERPR	DHCP host name
Gap detect. mode	Store prod.prof.	Startsen. In.Type	Interface	FTP server
Dispense speed	Del. prod.profil	Start disp. mode	Dispenser ID no.	FTP Password
Slew speed	Dispense counter	Start error stop	Spooler size	WEB server
Label pitch	Disp. Cnt. Reset	On inhibit enter		WEB admin passw.
Lab. stop offset	Factory settings	On inhibit leave	>COM1 PORT	WEB supervisor p.
Start offset	Custom defaults	Turn-on mode	Baud rate	WEB operator p.
Product length	Store Parameters	Language	No. of data bits	
Multi label mode	Auto Sensor Adj.	Access authoriz.	Parity	
Label 2 offset [1a]	Sensor Adjust	Materialend err	Stop bits	
Label 3 offset [1b]	Speed Adaption	Materialend warn	Data synch.	
Miss. label tol.	Encoder Type	Rewinder full	Frame error	
Miss. label mode	Encoder Resol.	Ext. OD sensor		
Stop count. mode	Encoder Diameter	OD Sens.polarity	>NETWORK PARAM.	
Label stop quan. [2]	Rewinder Operat.		IP Addressassign	
	Tandem Operation		IP address	
	Tandem startmode		Net mask	
	Tandem synchron.		Gateway address	
	Slave IP address		Port address	
	Tandem Distance		Ethernet speed	
	Label sens. type		MAC Address	

[Tab. 30] Functions menu – part 1 (grey shading = function is described in the following).

1a)Only appears if LABEL SETUP > Multi label mode = „x labels/start“.
1b)Only appears if LABEL SETUP > Multi label mode = „3 labels/start“.
2) Only appears if LABEL SETUP > Stop count. mode = „On“.

SIGNAL INTERFACE	(continued)	SERVICE/DIAGNOS.	SERVICE DATA	(continued)
Interface mode	>AI BOARD SIGNAL	Service	>MODULE FW VERS.	Work place
>PLC SIGNALS	Applicator type	Serv. data reset	System version	Company name
End dispense mod	Apply mode	Sensor Test	System revision	
Disp. end delay	Start mode	PS registers	System date	>DISPLAY DATA
End pulse width	Dwell time	Memory card test	Applicator int.	Display Version
	Blow on time	Test functions		Display serialNr
>APPLIC. SIGNALS	Restart delay	Store diagnosis	>OPERATION DATA	Remote disp.vers
Applicator type	Position timeout	Gen.Support Data	Service operations	Remote disp. ##
Status outputs	Apply comp. time	Data blocks del.	Tot. mat. length	
Apply mode	Touch down sens.		Dispencing cycl.	>MEMORY DATA
Dwell time	TouchDownTimeout		Operation time	Ram memory size
Blow on time			Total Operation	Flash mem size
Restart delay	>AI BOARD SIGNAL			Custom defaults
Position timeout	Status signals		>POWERSUPPLYDATA	
Apply comp. time			Type	
Touch down sens.	>ACTIVE INPUTS		Version	
TouchDownTimeout	Start signal		Serial number	
	Inhibit signal		PS Temperature	
	OD sensor signal		Standby+On time	
			>CPU BOARD DATA	
			CPU identifier	
			PCB Revision	
			FPGA version	
			MAC Address	
			Serial number	
			Production date	
			PCB part number	
			Board part numb.	
			Manufacturer	

[Tab. 31] Functions menu – part 2.

Notes

Function descriptions

The following chapters only describe those functions that are necessary for operating an ALS 2xx/272 that has been configured and set up. These functions are highlighted in grey in the overview.

EXPERTS

Settings of functions that are *not* described in the following may only be changed by qualified service technicians. These functions are described in the service manual.

The settings range or the individual settings for a function are shown in square brackets.

– The default value is italicised for functions that have individual settings.
– Settings that consist of several words are shown in quotation marks.

Quick setting

Buttons	Effect
↓ + ↵	Decrease value with 10fold speed.
↑ + ↵	Increase value with 10fold speed.
↓ + ↑	Reset value to lowest setting.

[Tab. 32] Button combinations for quick setting of functions with a huge value range.

LABEL SETUP menu

Load prod.profil function

– Loads product profiles from the internal database.
– Product profiles contain product-specific settings.
– You can select a maximum of 16 product profiles.
– You can only select product profile numbers that have profiles already stored for them.
– See Loading a product profile 🗋 on page 62.

Gap detect. mode function

– After one of the following events, the labeler must always search for the punch, that is initialize the label material: after switching the device on; after changing the label material.
– Settings: [Manual, „Autom. forward“]

  Manual: The operator has to initialize the material always manually by pressing the feed key several times.

  Autom. forward: The material initialization is always done automatically, if necessary.

Dispense speed function

– The speed at which the label is dispensed
– Setting range:

  ALS 204: [1.0…40.0] m/min; default: 10.0

  ALS 206: [1.0…30.0] m/min; default: 10.0

  ALS 256: [1.0…50.0] m/min; default: 10.0

  ALS 209: [1.0…25.0] m/min; default: 10.0

  ALS 272: [1.0…70.0] m/min; default: 10.0
– See Dispensing speed 🗋 on page 57.

Slew speed function

– Feed speed at which the label material is driven if missing-label-gaps occur and during the automatic measuring of the label length
– Setting range:

  ALS 204: [1.0…40.0] m/min; default: 1.0

  ALS 206: [1.0…30.0] m/min; default: 1.0

  ALS 256: [1.0…50.0] m/min; default: 1.0

  ALS 209: [1.0…25.0] m/min; default: 1.0

  ALS 272: [1.0…70.0] m/min; default: 1.0

Label pitch function

– Label pitch = label length+space
– Setting range: [5.0…600.0] mm
– See Label pitch 🗋 on page 56.

Lab. stop offset function

– Stop position of the label on the dispensing plate
– Setting range: [0.0…999.9] mm; default: 20.0
– See Label stop position 🗋 on page 56.

Start offset function

– Distance between the product sensor and the top of the dispensing plate
– Setting range: [15.0…2999.9] mm; default: 15.0
– See Label position on the product 🗋 on page 58.

Product length function

– With this function activated, the machine ignores all start signals, until the product has passed the dispensing edge
– Setting range: [0.0…1999.9] mm; default: 0.0
– See Suppressing start signals 🗋 on page 59.

Multi label mode function

– Settings: [*Disabled*, „x labels/start“]

  Disabled: Each start signal causes printing of one label.

  „x labels/start“: Each start signal causes printing of x labels; x = [2…20]

  x > 3: The distance of all following labels after the 2nd label matches the value set in LABEL SETUP >
  Label 2 offset.

Label 2 offset function

– Only appears if LABEL SETUP > Multi label mode = „x labels/start“.
– Defines the distance of the 2nd label and of all following labels, if x > 3 (see LABEL SETUP > Multi label mode function). The distance is measured from the front label edge of the preceding label.
– Setting range: [x…9999.9] mm; Default: x, with x = LABEL SETUP > Label pitch.

Label 3 offset function

- Only appears if LABEL SETUP > Multi label mode = „3 labels/start“.
- Defines the distance of the 3rd label for the LABEL SETUP > Multi label mode function (see above). The distance is measured from the front label edge of the preceding label.
- Setting range: [x…9999.9] mm; Default: x, with x = LABEL SETUP > Label pitch.

Miss. label tol. function

- Missing label tolerance
- The maximum permissible number of successive missing labels on the label strip
- Setting range: [0…10] mm; default: 1
- See Missing labels 🗋 on page 60.

Stop count. mode function

- Settings: [Enabled, *Disabled*]

  Enabled: The dispense counter counts down from the value set in LABEL SETUP > Label stop quan. When the counter reaches 0, no further labels are dispensed.

  Disabled: The labeller counts up, i.e. each label dispensed increases the counter reading.

Label stop quan. function

- After this amount of dispensed labels, the dispenser stops
- Function only appears, if LABEL SETUP > Stop count. mode = „On“
- Setting range: [0…99999]; default: 0

MACHINE SETUP menu

Store prod.prof. function

- Storing a product profile, see Storing a product profile 🗋 on page 63.

Del. prod.profil function

- Deleting a product profile, see Deleting a product profile 🗋 on page 64.

Dispense counter function

- Enables dispense counter (displayed during labelling) to be adjusted by pressing the ↑ and ↓ keys.

Disp. Cnt. Reset function

- Settings: [*No*, Yes]

  Yes: Dispense counter is set to zero.

  No: Dispense counter is not set to zero.

Turn-on mode function

- Mode the machine is in after being switched on
- Settings: [*Online*, Offline, Standalone]

  Online: Labelling mode

  Offline: mode for adjusting settings

  EXPERTS Standalone: This mode is used for loading firmware or configurations from external memory medium.

Language function

- Language of display text
- Settings: [German, *English*, French, Spanish, Dutch, Danish, Italian, Polish, Turkish, Russian, Czech, Japanese, Chinese]
- Chinese: Not all display texts are translated into chinese. Not translated texts are displayed in english

Materialend err function

- Refers to the internal OD control.
- Settings: [Off, *„Mat.diam < x mm“*]
- Setting range for x = [40,0…500,0]
- Default setting: x = 60

Deactivating the function:

➔ Set x < 40.

Re-activating the function:

➔ Press the ↑ key.

Defines the diameter threshold for the material roll. If the (calculated) material roll diameter is below the threshold value, the following *status message* appears:

Status num: 5071 Material end unw

An additional material end error is caused, if no unwinder rotation is detected during at least 600 mm of material feeding:

Status num: 5072 Material end unw

Materialend warn function

- Refers to the internal OD control.
- Settings: [Off, *„Mat.diam < x mm“*]
- Setting range for x = [40,0…500,0]
- Default setting: x = 80

Deactivating the function:

➔ Set x < 40.

Re-activating the function:

➔ Press the ↑ key.

Defines the diameter threshold for the material roll. If the (calculated) material roll diameter is below the threshold value, the following *warning* appears:

ONLINE Material low

Rewinder full function

Defines the maximum permissible diameter of the wound backing paper on the backing paper rewinder. If the diameter is exceeded, the following status message appears:

Status num: 5064 Rewinder full

– Setting range: [50…500] mm; Default setting: 202 mm

Before operation

ELECTRICAL CONNECTIONS

Power supply connection

WARNING!

This machine operates using mains voltage! Touching live electrical parts may expose you to hazardous electrical currents and may lead to burns.

→ Make sure that the device is switched off before you connect the power cable.

→ Only connect the unit to a grounded power socket fitted to authorised standards.

→ (ALS 20x) Only operate the device with the mains voltage set on the voltage selector switch.

→ (ALS 20x) Ensure that the unit is set to receive the mains voltage supplied by your electricity provider.

→ (ALS 256/ALS 272) Only operate the device using the system voltage indicated on the name-plate.

→ The power cable should not be more than 3 m long.

The device is *only* completely *disconnected from the mains if the power cable* is unplugged. Therefore:

→ Make sure the power supply socket is accessible.

→ In case of emergency, switch off the device and disconnect the power cable!

[33] Power supply (A) on the ALS 20x

Checking the power supply setting

ALS 256/ALS 272: A power supply setting is not required.

The ALS 20x Label Dispenser is suitable for operation with a power supply of 230 V (AC) or 110 V (AC).

→ Make sure that the power cable is disconnected.

ALS 20x with splash guard:

→ Turn out the 4 fixing screws [35B] and pull off the hood [35A].

→ Check to see that the voltage that has been set conforms to the local mains voltage.

EXPERTS If you are unsure of what mains voltage your local electricity supplier provides, refer to a qualified service technician.

Switch setting	Permissible mains voltage
115	100–120 V (AC)
230	200–240 V (AC)

[Tab. 36] Permissible mains voltages for both positions on the voltage selector switch.

Changing the voltage setting:

→ Make sure that the power cable is disconnected.

→ Slide the switch [35A] to the respective opposite position.

– Insert a small screwdriver into the groove [35B] and move the red insert horizontally to the opposite stop position (to the left in Figure [35]).

ALS 20x with splash guard:

→ Before re-installing the hood [35A], make sure that…

– the power switch at the machine is switched on (position „I“).

– the power switch at the hood is switched off (light off).

Connecting the power cable

→ Make sure that the power switch [37A] is set to ‘O’ (off).

→ Using the supplied power cable, plug the unit into a socket connected to the mains supply.

ALS 20x with splash guard: The power cable is connected by installing the hood.

For more information on fuses, see section Replacing fuses 🗋 on page 65.

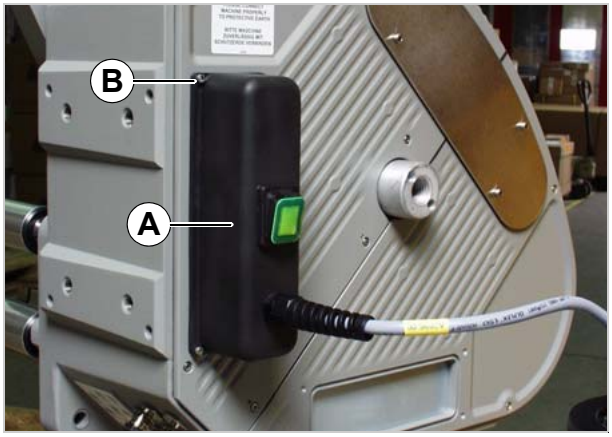

[34] ALS 20x with splash guard

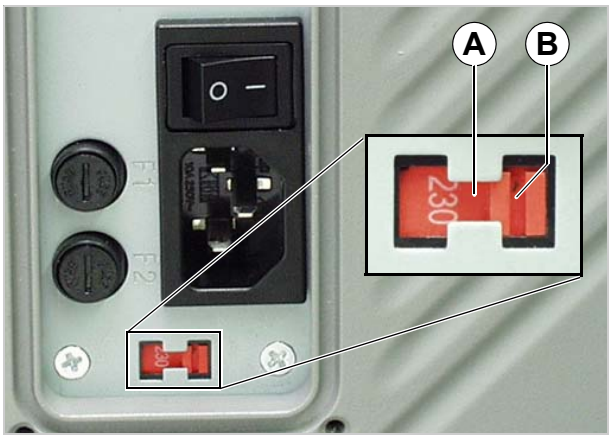

[35] Voltage selector switch on the ALS 20x (set to 230 V in the figure)

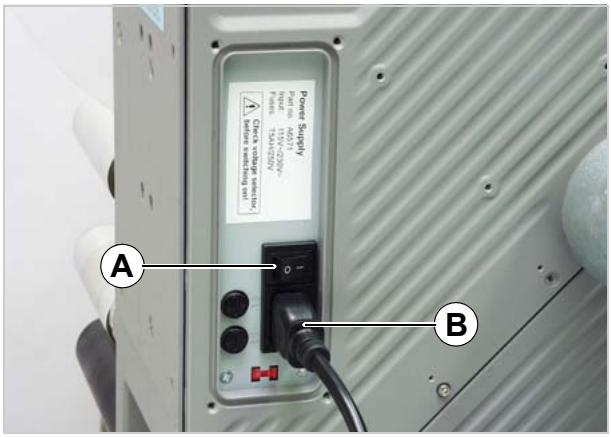

[37] Power cable (B) plugged in.

Connecting sensors

WARNING!

The machine operates using mains voltage! Touching live electrical parts may expose you to hazardous electrical currents and may lead to burns.

➔ Only link the unit to devices that fulfil the SELV (safety extra-low voltage) circuit requirements specified in EN 60950.

➔ Check whether the required sensors are connected before turning on the unit [38].

The minimum required sensors:

- Label sensor (installation location: dispensing edge)
- Product sensor (installation location: conveyor belt)

Additional optional sensors:

- Rotary encoder (required for speed adaption)
- External outer diameter checking sensor (provides advance warning of the end of a label roll)
- Alternative label sensor; for example, capacitive sensor, used to detect transparent labels.

ALS 20x with splash guard: Not used connectors must be closed with the plugs shipped with the machine.

EXPERTS

Service technicians find further information regarding suitable sensor types, pin assignments, and so on in the service manual.

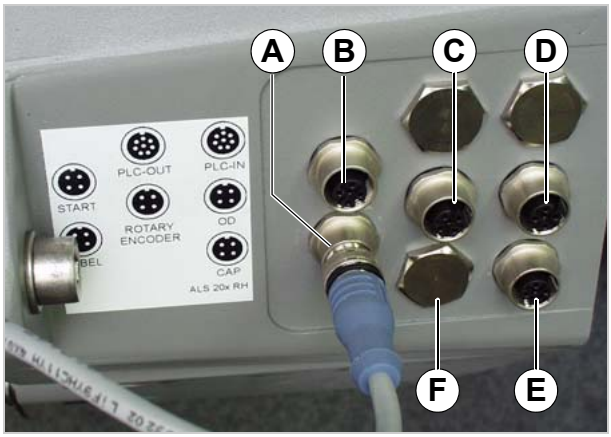

[38] Sensor connectors:
A Label sensor
B Product sensor
C Optional: Rotary encoder
D Optional: Roll diameter check
E (ALS 20x/ALS 272) Optional: Alternative label sensor
F (ALS 256) Optional: Alternative label sensor

INSERTING LABEL MATERIAL

Inserting a label roll

WARNING!

Risk of injury due to moving and rapidly rotating parts!

➔ Before inserting the label roll, ensure that the device is in offline mode.

Danger of injury caused by falling label roll!

➔ Wear safety shoes.

Removing spent backing paper

Assuming backing paper has gathered on the rewinder [39A] :

➔ Press the release button [39B].

– The tensioning mechanism of the rewinder is slackened.

➔ Remove the rewound backing paper.

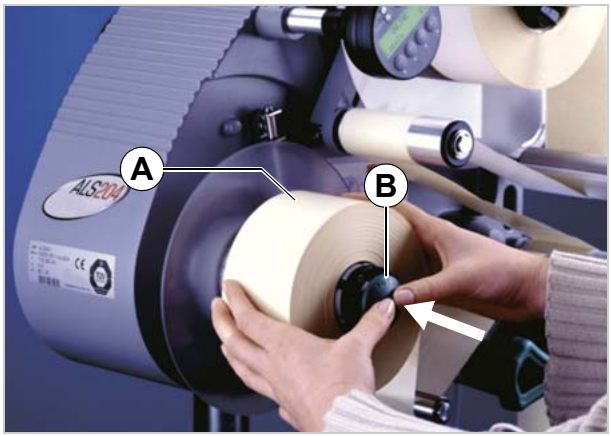

[39] **A** Rewound backing paper
B Release button
C Backing paper path

Removing glue residue

➔ If necessary, clean the following components:

– Dispensing plate

– Deflection rollers

– Drive rollers

– Pressure roller

➔ Follow the directions provided in section Maintenance and cleaning 🗋 on page 65.

Inserting a new label roll

➔ Push the material roll [40A] onto the unwinder as far as it will go.

➔ Rotate the rotary knob [40B] in a clockwise direction until the label roll sits tightly.

➔ Run the label strip around the dancer arm as shown in the figure [40C].

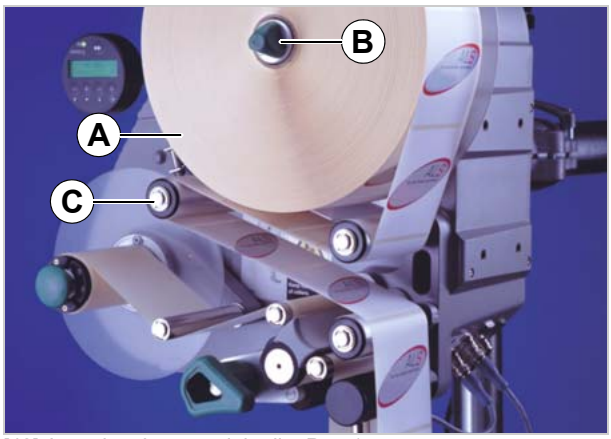

[40] Inserting the material roll – Part 1.

Threading the label roll

Threading diagrams

Solid line: Path for label rolls with labels facing outwards.

Dottet line: differing path for label rolls with labels facing inwards.

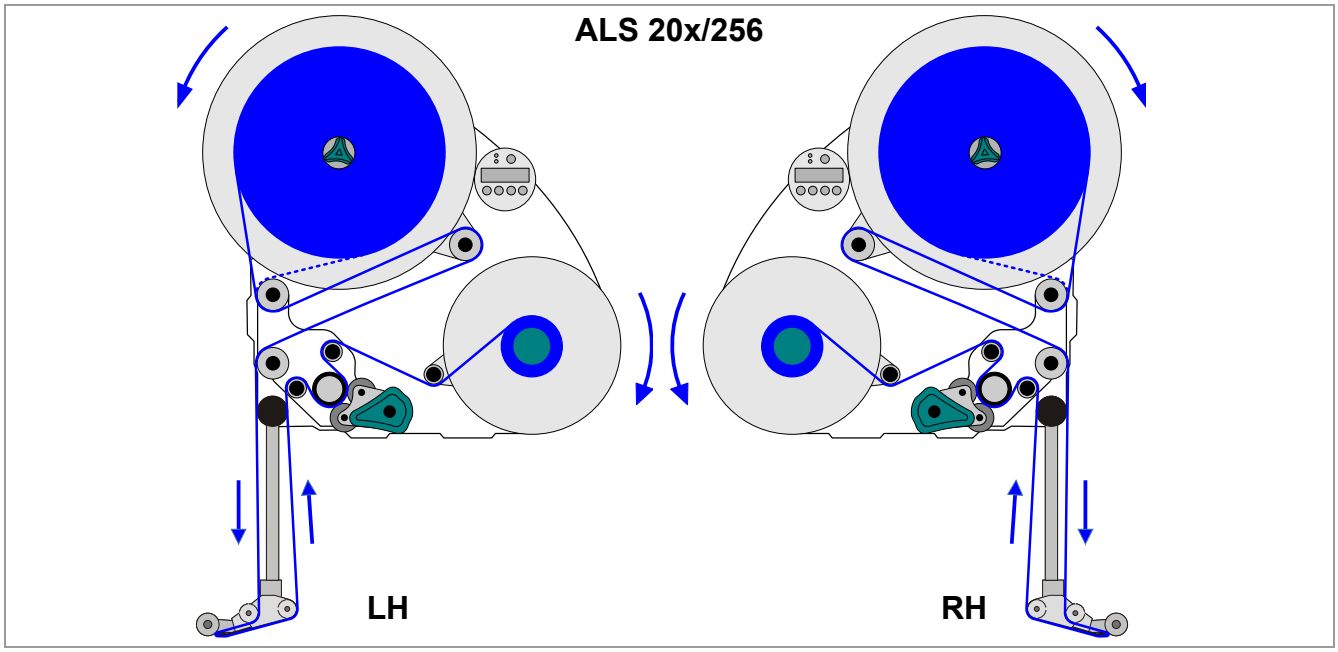

[41] Threading diagram for ALS 20x/256 with L-shape disp. edge.

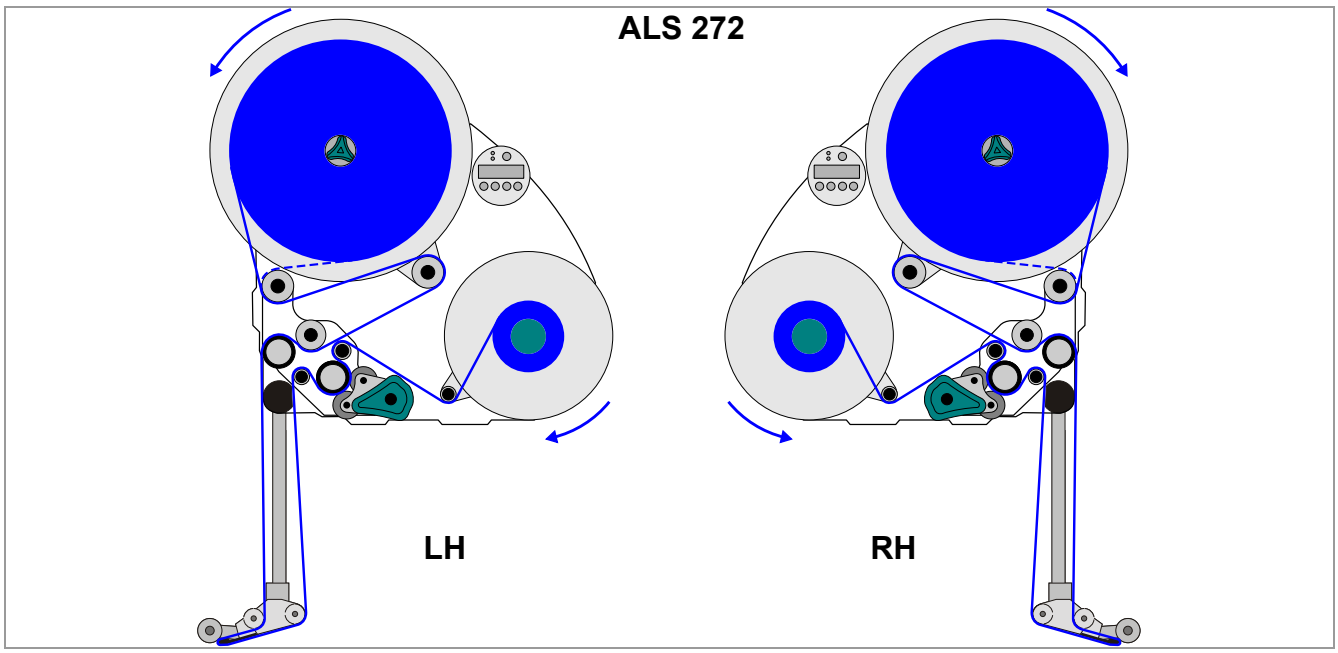

[42] Threading diagram for ALS 272 with L-shape disp. edge.

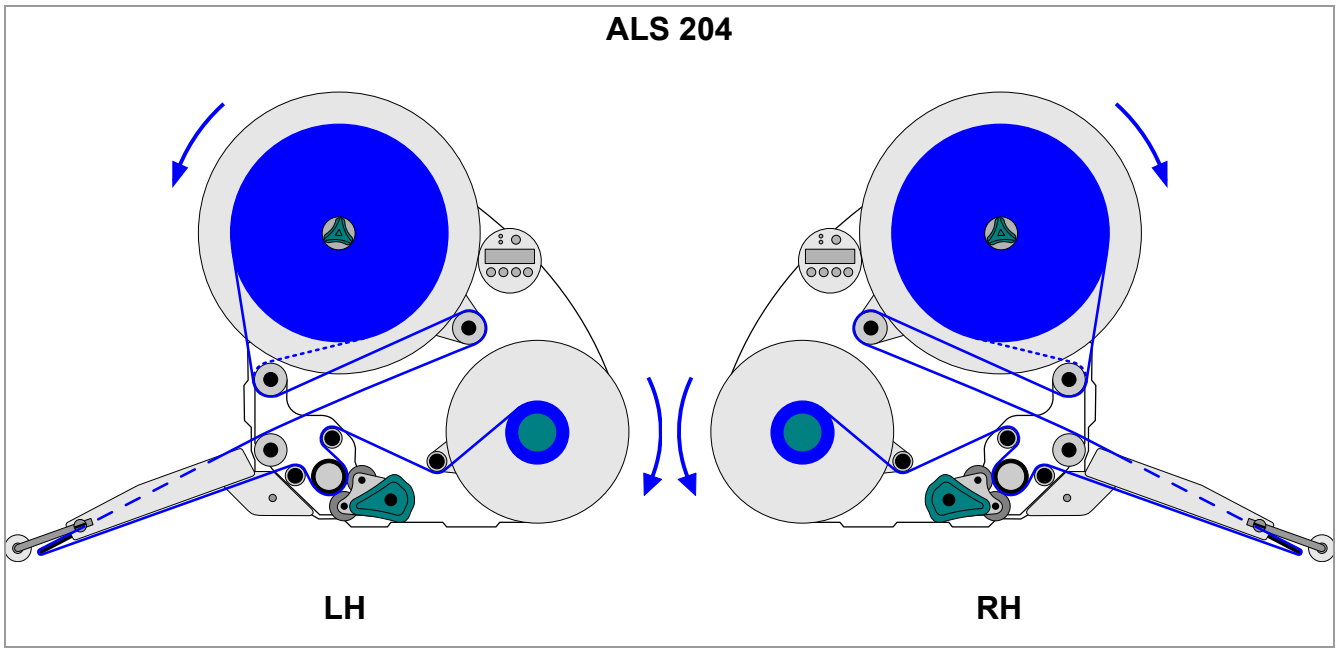

[43] Threading diagram for ALS 204 with V-shape disp. edge.

Threading the label roll at the dispensing edge

Fixed [44] (standard) and pivotable L-Shape dispensing edges:

→ Unroll around 1 m of label strip and remove the labels from it.

→ Pass the backing paper around the first deflection roller [44A] and through the slot in the sensor [44B].

→ Feed the backing paper under the pressure roller [44C] to the dispensing plate [44D].

→ Feed the backing paper around the dispensing plate to the second deflection roller [44E].

Spring loaded [45] and pneumatic [46] L-Shape dispensing edges:

→ Additionally pass the backing paper between the two slim deflection rollers at the joint [45A] [46A].

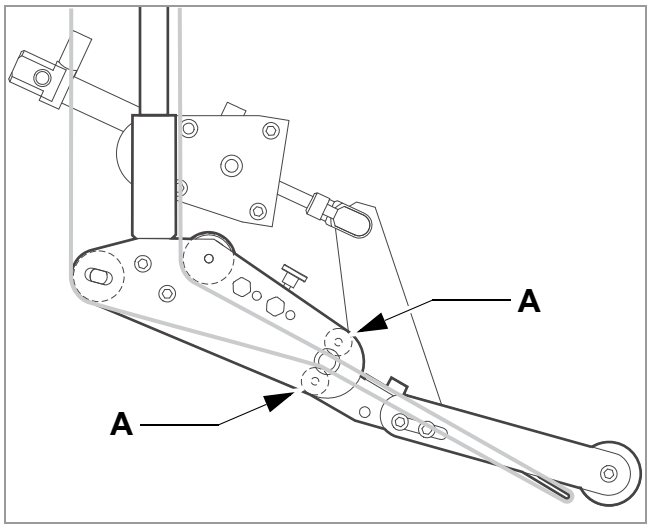

[46] Path of the label strip at the pneumatic dispensing edge (option).

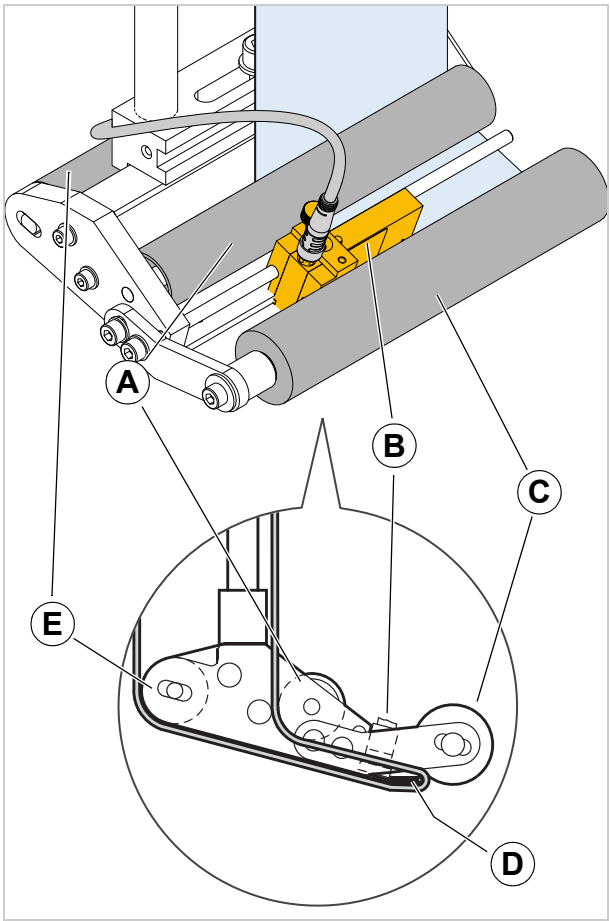

[44] Path of the label strip at the dispensing edge.
A 1st deflection roller
B Label sensor
C Pressure roller
D Dispensing plate
E 2nd deflection roller

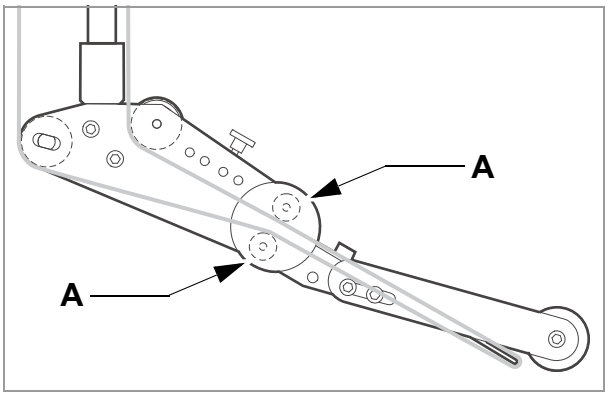

[45] Path of the label strip at the spring loaded dispensing edge (option).

Threading the label roll onto the drive roller

→ Open the pressure roller. To do so, rotate the lever [47D] in a clockwise direction.

→ Feed the backing paper around the deflection roller [47B], drive roller [47C] and the dancer arm [47A].

→ Close the pressure roller. To do so, rotate the lever until it snaps in noticeably.

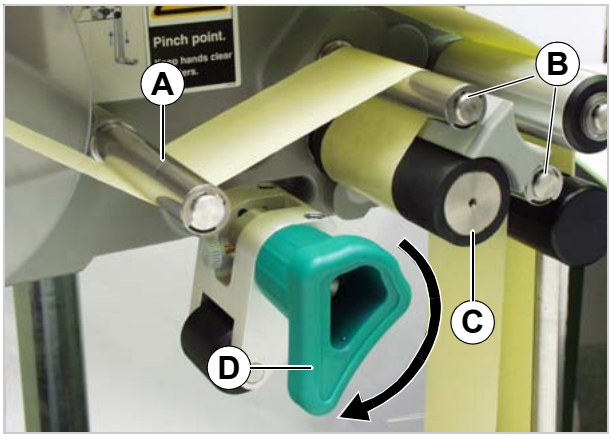

[47] Open the pressure roller.

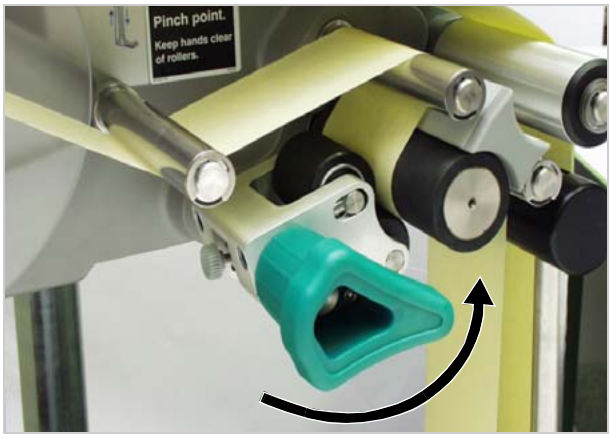

[48] Close the pressure roller.

Fastening the label roll to the rewinder

→ Clamp the backing paper to the rewinder as shown and tighten it [49].

If the machine is switched *off*:

→ Manually rotate the rewinder by one turn.

If the machine is switched *on*:

→ Make sure that the machine is in offline mode.

→ Push the dancer arm [48A] against the top limit for more than 2 seconds.

– The following error message shows up:

Status num:	5143
Rewinder stop	

– Now, the rewinder can be turned manually.

→ Turn the rewinder one turn.

→ Press the ↵ key to acknowledge the error message.

[49] Fastening the backing paper to the rewinder.

MECHANICAL SETTINGS

Adjusting the unwinder's core diameter

Tool:

– 3 mm hexagon (Allen) screwdriver

The unwinder can be adjusted with core adapters [50B] to fit the inner diameter of the label roll. The adapters must be fitted and dismantled in different ways depending on this diameter:

– 38.1 mm (1") core

➔ Unscrew the screws [50A] (2 for each adapter) and remove the adapters.

– 76.2 mm (3") core

➔ Screw on the adapters, as is shown in Figure [50].

– 101.6 mm (4") core

➔ Screw on the adapters, as is shown in Figure [51].

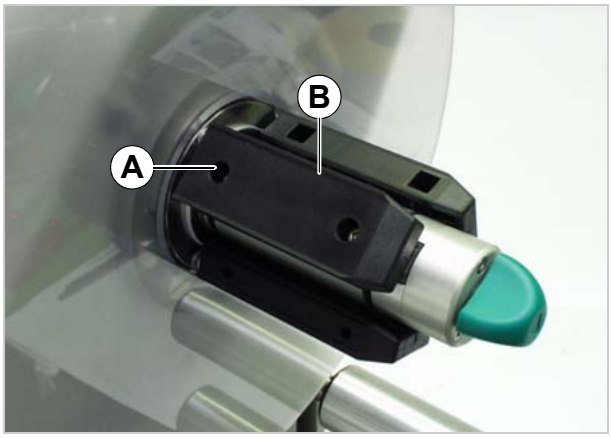

[50] Core adapter positions for a core diameter of 76.2 mm.

[51] Core adapter positions for a core diameter of 101.6 mm.

Positioning the pressure roller

➔ Open the pressure roller [52B]. To do so, rotate the lever [52C] until the roller snaps up.

➔ Release thumb screw [52A].

➔ Align the pressure roller over the backing paper so that it is centred.

➔ Close the pressure roller.

➔ Screw the thumb screw tight.

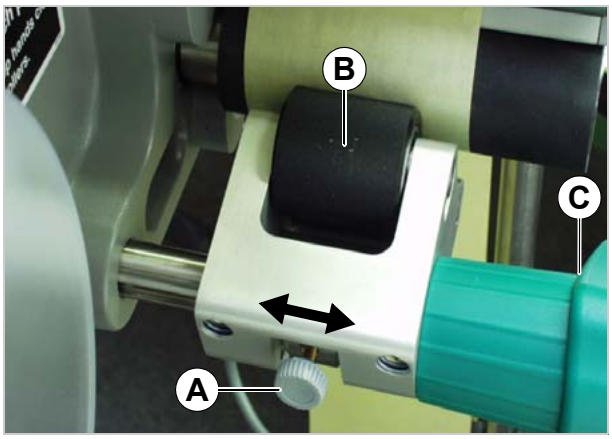

[52] Setting the position of the pressure roller (B).

Positioning the label sensor

→ Release the thumb screw [53B].

→ Position the sensor along the axle in such a way as to allow it to register the spaces between the labels.

The LEDs [53A] light up when the sensor is positioned over a gap.

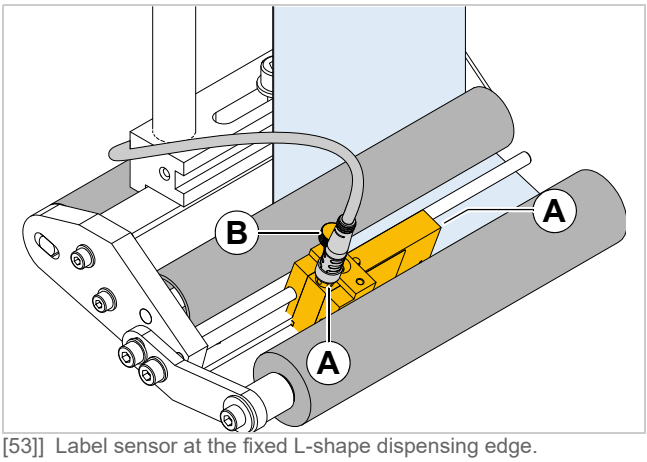

[53]] Label sensor at the fixed L-shape dispensing edge.

Setting the dancer arm restoring force

The unwinder dancer arm is preset in a way, that a wide range of label materials can be processed whithout having to change the dancer arms restoring force.

Even so, very narrow label material can under certain circumstances tear off or expand in a way which results in poor labelling precision. In those cases, the restoring force must be decreased.

Tool: 2.5 mm hex socket screwdriver

→ Turn the adjusting screw [54A] on the dancer arm *left* to *increase* restoring force.

→ Turn the adjusting screw [54A] on the dancer arm *right* to *decrease* restoring force.

EXPERTS A service technician can restore the factory setting, see service manual chap. 9.4.3 section „Adjusting restoring force of dancer arm“.

If the problem still occurs, although the restoring force is already set to a minimum, there is the option of building in some weaker springs.

EXPERTS The springs must be built in by a qualified service technician. Instructions can be found in the service manual, chap. 9.4.3 section "Replacing dancer arm springs", „Narrow label kit“.

[54]] Setting screw (A) at the unwinder dancer arm.

Operation

START-UP AND SHUTDOWN

Turning on the unit

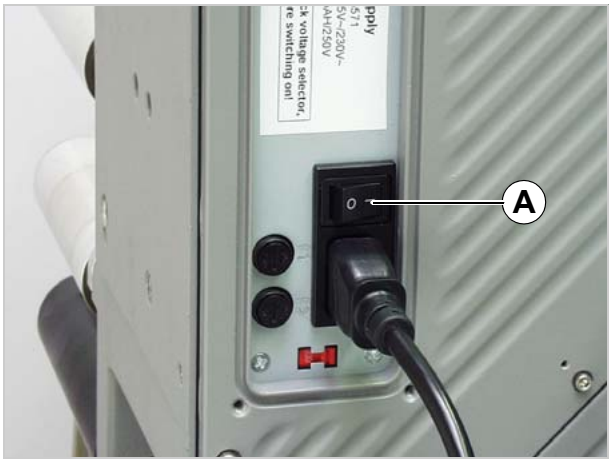

[55] Main switch (A) of the ALS 20x.

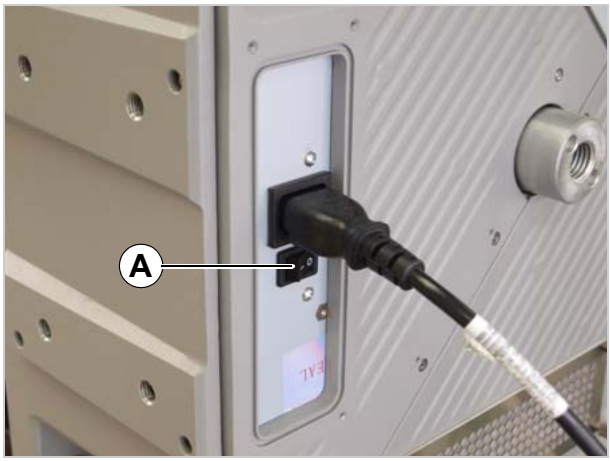

[56] Main switch (A) of the ALS 256/ALS 272.

➔ Set the main switch [55A][56A] of the unit to ‘I’ (On).

– The following messages are displayed during the start process:

ALS204 RH V 1.40

(machine type and firmware version)

ONLINE	
Label	0

– Once switched on, the ALS 2xx/272 is in dispensing mode, see section Dispensing mode 🗋 on page 33.

Starting label dispensing

Dispensing with a product sensor

Once switched on, the ALS 2xx/272 is in dispensing mode; this means that triggering the product sensor will cause a label to be dispensed.

Prerequisites:

– The label length must be specified.

– The product sensor must be connected.

EXPERTS – The sensors must be configured correctly (PNP/NPN).

Dispensing without a product sensor

It is also possible to trigger the dispensing process without a product sensor:

– The machine is in dispensing mode:

➔ Press the ▶▶ button.

– The machine is in configuration mode:

➔ Press the ▶▶ *button briefly* (less than two seconds).

Stopping/Continuing the dispensing process

– The machine is in dispensing mode.

Stopping the dispensing:

➔ Press the ↵ button.

– The dispenser stops.

– Displayed text (Second line = scroll text.):

ONLINE Stopped . press ^ key to start

Continuing the dispensing:

➔ Press the ↑ button.

CONFIGURATION AND MONITORING

Function menu settings

Label pitch

→ Switch to configuration mode

Calibrating the label pitch automatically:

→ Hold down the button ▶▶ for a while (longer than two seconds).

Or: Enter the label pitch manually:

→ Measure the label pitch [57C].

→ Call the LABEL SETUP > Label pitch function.

→ Enter the measured value in millimetres.

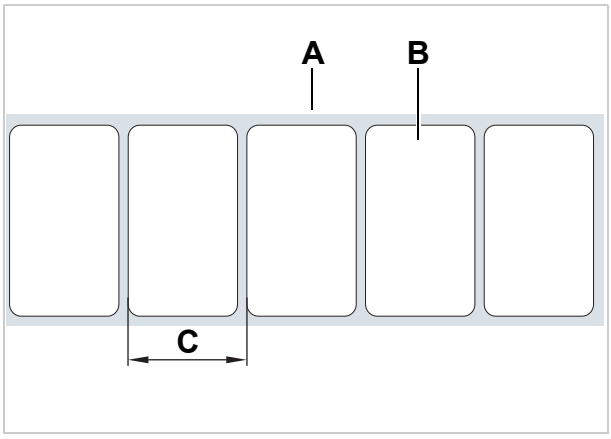

[57] **A** Label web
B Label
C Label pitch

Label stop position

Setting with LABEL SETUP > Lab. stop offset.

> CAUTION!
>
> Mind the following setting rules to avoid a strong decrease of dispensing accuracy:
>
> → At maximum dispensing speed set the Lab. stop offset to at least the following value [a]:
>
> ALS 204: 14 mm
>
> ALS 206: 8 mm
>
> ALS 209: 8 mm
>
> ALS 256: 9 mm
>
> ALS 272: 10 mm
>
> → Don´t set Lab. stop offset to the same value as LABEL SETUP > Label pitch (also not to a multiple of the value).
>
> → Don´t set Lab. stop offset to „0“.
>
> → Set Lab. stop offset so that the label sensor stands on top of the label as far as possible away from the label edge, when the label web stops.

a) General rule: The setting must at least equal the „brake distance“ of the label web until it stops. For high speed, this value is higher than for low speed.

Prerequisites:

– The label length must be specified.

The next label to be dispensed waits in the label stop position. Here it is useful if the label protrudes over the dispensing edge a little [59].

The labeler was pre-configured ex works for use with the supplied label sensor. If this sensor is used, the label stop position setting will only require minimal correction.

Correcting the default setting:

➔ Call the LABEL SETUP > Lab. stop offset function.

➔ Increase the value to increase the overhang or lower the value to reduce the overhang.

Setting	Effect
19 mm [b]	The label stops flush with the dispensing edge.
(19 + x) mm	The label stops with x mm overhang.

[Tab. 58] Special settings for the label stop position.

b) 19 mm = Distance [59B] between label sensor and dispensing edge (with fixed L-shape dispensing edge).

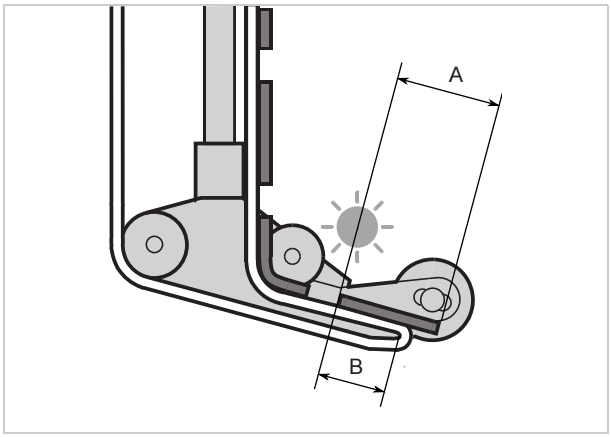

[59] Label stop position (A)

Dispensing speed

You can set the dispensing speed to a fixed value or you can configure it to automatically adjust to the speed of the conveyor belt (speed adaption). The second option requires you to connect a rotary encoder that measures and relays the conveyor speed to the dispenser.

Configuring a *fixed value*:

➔ Use the two left buttons to set the speed in dispensing mode (online settings) (see Online settings 🗋 on page 34).

Or use the function menu settings:

➔ Call the LABEL SETUP > Dispense speed function and set the speed you require.

Configuring *speed adaption*:

➔ Turn the function on by setting MACHINE SETUP > Speed Adaption to ‘Yes’.

➔ Set MACHINE SETUP > Encoder Resol. and MACHINE SETUP > Encoder Diameter as appropriate for the employed rotary encoder.

EXPERTS

– See the service manual for information on suitable rotary encoders.

Suppressing start signals

A start signal can be prematurely triggered by the shape of the product or reflective surfaces, what can cause erroneous labelling. In case of a product causing unwanted additional start signals while the product passes the dispensing edge, those signals can be suppressed by setting function LABEL SETUP > Product length to the product length.

Example [60]:

If the product [D] reaches the product sensor [C], a start signal is sent and the machine dispenses a label. The recesses in the product trigger additional start signals; the product would be labelled several times. With the product length [A] set in the LABEL SETUP > Product length function, the machine ignores all start signals until the product has passed the dispensing edge.

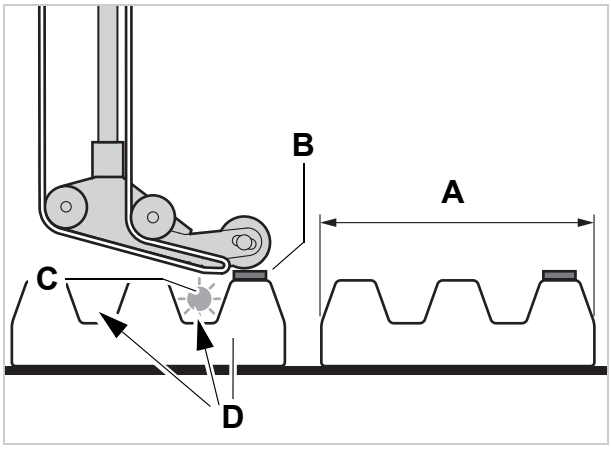

[60] **A** Product length
B Label
C Product sensor
D Product with recesses (arrows)

Label position on the product

Prerequisites:

– The label length must be specified.
– The label stop position must be set.

Configuration in dispensing mode:

➔ Use the two right buttons to set the start offset (see Online settings 🗋 on page 34).

Or use the function menu settings:

➔ Call the LABEL SETUP > Start offset function and set the start offset.

– The label should be flush with the front edge of the product:

➔ Enter the distance between the product sensor and the dispensing edge [61A].

– The label should be stuck at a distance from the front edge of the product:

➔ Increase the start offset by the distance [62A] to the product's front edge.

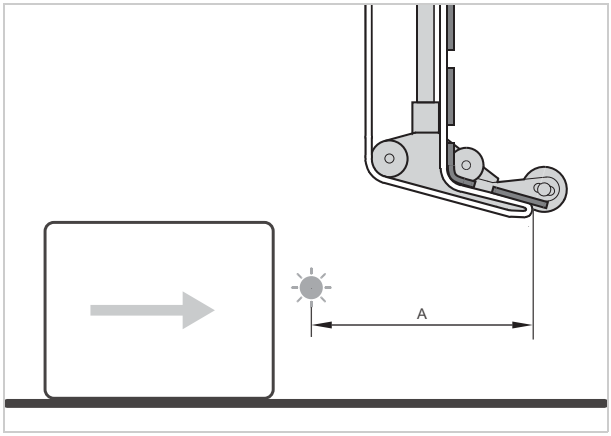

[61] Distance between the product sensor (left) and the dispensing edge (right).

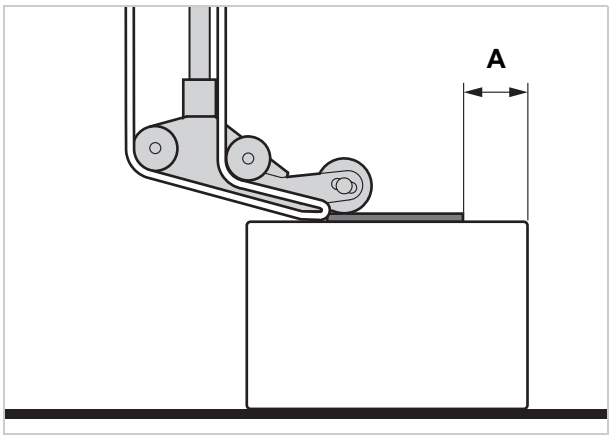

[62] Distance (A) between the label and the product's front edge.

Monitoring functions

While in dispensing mode, an electronic controller monitors the following functions:

Material end / Roll diameter

(OD = outer diameter)

To enable a quick renewal of the material roll, the machine can alarm the operator before the end of the material roll is reached. This provides the OD-control, which is available in two versions:

– Internal OD-control

  The machine control elaborates the signals coming from two sensors, which are integrated into the material unwinder.

– External OD-control (accessory)

  A light barrier attached to the material unwinder is triggered, if the roll OD falls below a certain value.

Depending on the configuration and setting of the machine, different messages appear in case of material end or the roll diameter falling below the critical value:

	Material end Error message	Critical OD reached Warning	Error message
No OD-control	Status num: 5001 No gap found	none	none
Internal OD-control	Status num: 5072 [1,2] Material end unw	ONLINE Material low	Status num: 5071 [2] Material end unw
External OD-control	none	ONLINE [3] OD sensor warn.	Status num: 5111 [4] OD sensor error

[Tab. 63] Messages for monitoring label stock.

1) If no rotation of the unwinder was registered during 600 mm of material feeding.
2) If MACHINE SETUP > Materialend err = „Mat.diam < x mm“
3) If MACHINE SETUP > Ext. OD sensor = „Warning“
4) If MACHINE SETUP > Ext. OD sensor = „Error“

If a *warning* occurs:

– Labelling operation is continued.

➔ Press the ↵ button, to delete the warning.

➔ Prepare for inserting a new material roll.

If an *error message* occurs:

– The machine stops.

➔ Press the ↵ button to delete the message.

➔ Remove the rewound backing paper.

➔ Insert a new material roll (see Inserting a label roll 🗋 on page 47).

Missing labels

A label missing from the label roll does not normally affect the dispensing operation, because the label feed continues until a label's edge passes under the label sensor.

Nonetheless, it can be important that missing labels are reported. By configuring the function LABEL SETUP > Miss. label tol., you can specify whether an error message is triggered after one or several missing labels:

```
Status num:      5001
   No gap found
```

At the same time, the machine stops.

Material tear

Which message appears depends on where the material path is torn.

– Material is torn between unwinder and dispensing edge [64A]:

```
Status num:      5072 [1,2]
   Material end unw
```

1) If no rotation of the unwinder was registered during 600 mm of material feeding.
2) If MACHINE SETUP > Materialend err = „Mat.diam < x mm“

– Material is torn between dispensing edge and feed roller [64B]:

```
Status num:      5001
   No gap found
```

– Material is torn between feed roller and rewinder [64C]:

Status num:	5140
Rewinder control	

See chap. Operational failures on page 69.

.

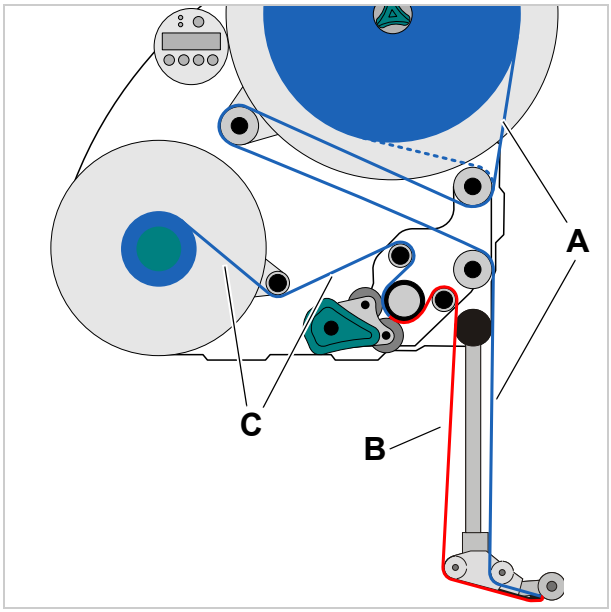

[64] Material tear off in sections A, B or C leads to different error messages.

Rewinder full

If the diameter of the rewound backing paper [65A] exceeds the admissible diameter (202 mm), the following message appears:

Status num:	5064
Rewinder full	

➔ Remove the rewound backing paper.

(See chap. Removing spent backing paper on page 47).

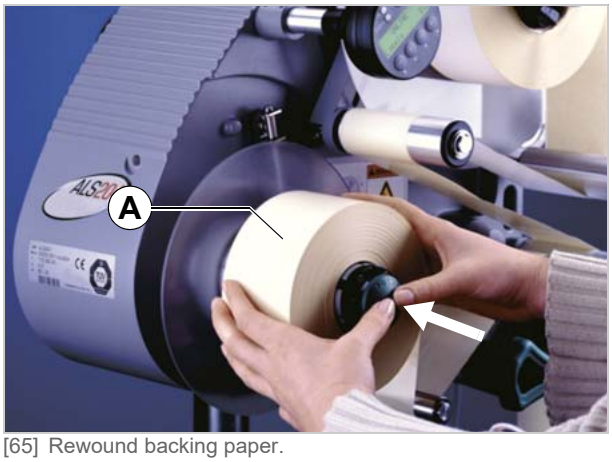

[65] Rewound backing paper.

USING PRODUCT PROFILES

What are product profiles?

Product profiles are memory locations that can store all the settings for the machine controls. For recurring production jobs, they allow you to quickly set the machine to the respective product.

– Number of memory locations: 16
– The memory locations are numbered. In addition, you can also enter a text identifier for each memory location (with a maximum of 9 alphanumeric characters).

Loading a product profile

> CAUTION!
>
> Incorrect settings may lead to production problems and damage both the unit and the equipment.
>
> ➔ Only staff who are qualified and specially trained should set up product databases.

➔ Call the LABEL SETUP > Load prod.profil function.

– The following message appears when no memory location is occupied:

```
Load prod.profil
No setup avail.
```

– Only occupied memory locations are displayed.
– When memory locations are occupied, the memory location that was loaded last is displayed first:

```
Load prod.profil
Prof 1 xxxxxx
```

Above example: The profile with the ‘xxxxxx’ text identifier has been stored at the first memory location.

➔ Press the ↑ or the ↓ button until the profile you require appears.
– Display:

```
Loading xxxxxx ?
No
```

➔ Press the ↓ button.

➔ Press the ↵ button.
– The unit restarts afterwards.
– Display after the restart:

```
Prof 1 xxxxxx
Labels                0
```

(in dispensing mode, ‘ONLINE’ is replaced by the current profile name).

Storing a product profile

Selecting the memory location

➔ Call the MACHINE SETUP > Store prod.prof. function.

– Display shown when all memory locations are unoccupied:

```
Store prod.prof.
Prof 1 Product 1
```

– When memory locations are already occupied, the memory location that was last active is displayed:

```
Store prod.prof.
Prof 5*customer_xyz
```

– A '*' occurring after the memory location number indicates that the memory location is already occupied (here by the 'customer_xyz' profile).

➔ Press the ↑ or the ↓ button until you retrieve the memory location you require (1–16).

➔ Press the ↵ button to activate the memory location.

– The profile name flashes, and you can now replace the name using any text you choose.

Entering profile names

Accepting the profile name 'Product 1' without changing it:

➔ Press the ↵ button twice.

– The profile is saved.

– Display:

```
Store prod.prof.
Storing ...
```

Changing a profile name:

➔ Press the ◇ button.

– Display:

```
Store prod.prof.
Prof x _
```

– The underscore marks the active position.

➔ Press the ↑ or the ↓ button to scroll through the available characters until the character you require appears.

➔ Press the ↵ button to accept the character.

– The underscore jumps to the next character.

➔ Enter the next character in the same way.

➔ When you have entered the last character, press the ↵ button.

– The profile is saved.

– Display:

```
Store prod.prof.
Storing ...
```

– The product profile has now been saved.

Deleting a product profile

➔ Call the MACHINE SETUP > Del. prod.profil function.

– The memory location that was active last is displayed.

➔ Press the ↑ or the ↓ button until you retrieve the memory location you require (1–16).

➔ Press the ↵ button to delete the memory location:

– Display:

```
Del. prod.profil
Clearing ...
```

– The product profile has now been deleted.

After operation

MAINTENANCE AND CLEANING

Replacing fuses

This section counts only for ALS 20x. The fuses at the ALS 256 and the ALS 272 cannot be replaced.

WARNING!

The machine operates using mains voltage! Touching live electrical parts may expose you to hazardous electrical currents and may lead to burns.

→ Make sure that the machine is switched off and the power cable is unplugged before removing the fuse insert.

CAUTION!

Risk of fire, if a wrong fuse type is inserted.

→ Only replace fuses with the type and rating specified in this manual.

The F1 and F2 fuses protect the primary side of the transformer. At any given time, only one of the two fuses is active. Which fuse is active depends on the switch setting of the voltage selector switch.

Active fuse	Mains voltage	Switch setting
F1	230 V	230
F2	110 V	115

[Tab. 66] Relation between the switch setting of the voltage selector switch and the active fuse.

The CPU board and sensors are protected by a separate fuse in the switching power supply that must/may never be replaced.

If either of the two fuses is not working properly, only the drive motors are affected; the display and sensors continue to operate as normal.

Tool: Screwdriver

→ Turn off the unit. Unplug the power cable.

→ Rotate the fuse holder a few degrees anticlockwise.

– The fuse holder pops up.

→ Take the fuse out of the fuse holder.

→ Replace defective fuse.

→ Replace the fuse holder and rotate it clockwise, while applying light pressure, until the slot is vertically positioned.

Required fuse type:

– T5AH 250 V

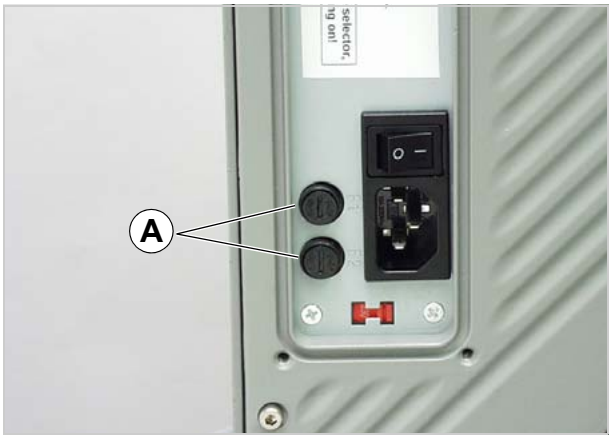

[67] Fuse holder (A) at the ALS 20x.

Cleaning agents

Cleaning agents for rubber rollers [68A]:

– Roller cleaner, order number 98925.
  If other cleaning agents are used, there is a chance the rubber may corrode.

Cleaning agents for metal deflexion rollers [68B]:

– Cleaning solvent, alcohol-based solvent, isopropyl alcohol, spray for removing labels

Cleaning the unit's housing:

– Commercially available neutral cleaning liquid

> CAUTION!
>
> Unsuitable cleaning agents can cause considerable damage to the unit!
>
> ➔ Do not use any cleaning agent that could damage or destroy the resin surface, labelling, display, nameplates, electrical components, etc. Observe the instructions of the cleaning agent manufacturer.
>
> ➔ Do not use any abrasive or plastic-corroding cleaning agents.
>
> ➔ Do not use any acidic or alkaline solutions.

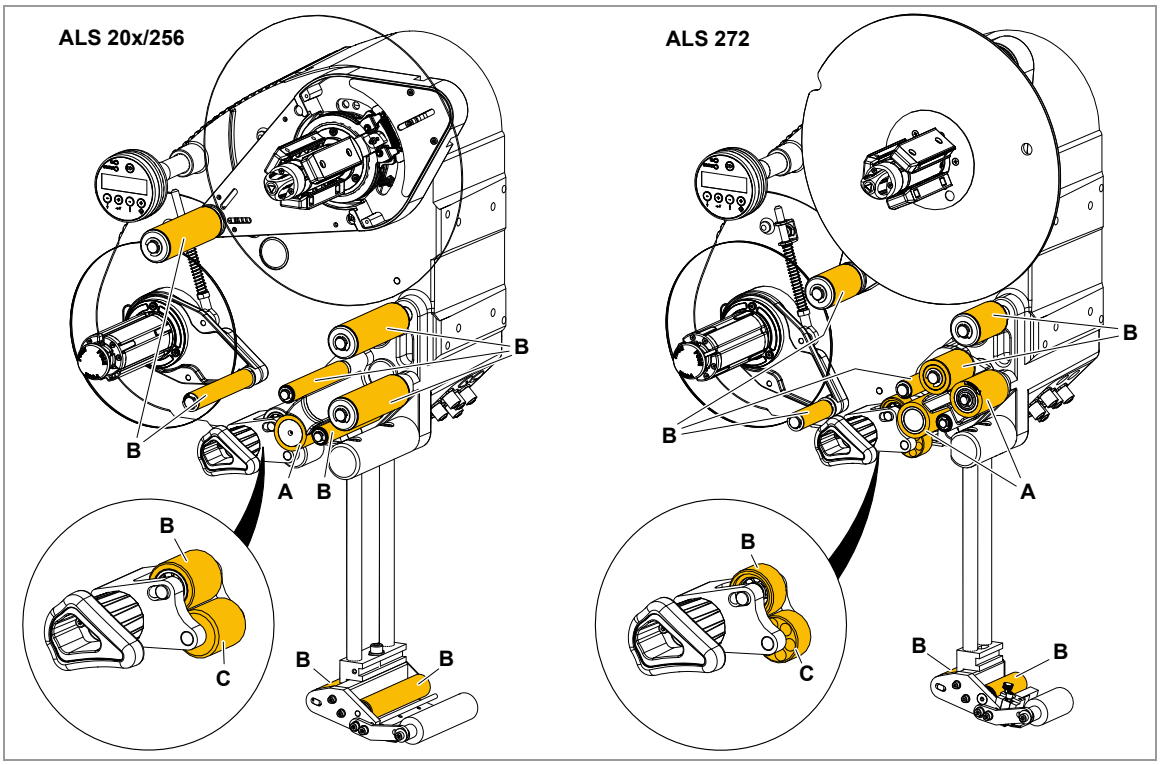

[68] Rollers at the ALS 2xx/ALS 272:
A Rubber roller
B Metal deflexion roller
C Plastic roller

Regular maintenance

The label dispenser is designed to be maintenance-free. However, you should service the unit regularly in order to ensure reliable long-term operating results.

Removing paper debris

Depending on operating conditions, you should perform the following at least once a week:

→ Wipe the paper residue from the rollers and edges.

→ Clean the sensor lenses with a soft brush or cloth.

Deflexion rollers

Glue from the label material may adhere to the deflexion rollers.

→ Moisten a clean cloth with cleaning solvent and wipe off the dirty deflexion rollers [68B] with it.

Rubber rollers

Glue from the label material may adhere to the rubber rollers.

→ Moisten a clean cloth with roller cleaner and wipe off the dirty rubber rollers [68A] with it.

Renewal of the dust filter liner (ALS 256/ALS 272)

> CAUTION!
>
> An exhausted filter liner can cause the machine to overheat and to break down.
>
> → Replace the filter liner regularly, at least in monthly intervals.

In case of overheating the machine, the error message „5026 MotorProtect CPU“ appears, see List of error messages 🗋 on page 71.

→ Screw out the four thumb screws [69A]. Remove the filter cover [69B].

→ Replace filter liner (article no. A8697).

→ Assemble the filter cover and fix it using the thumb screws.

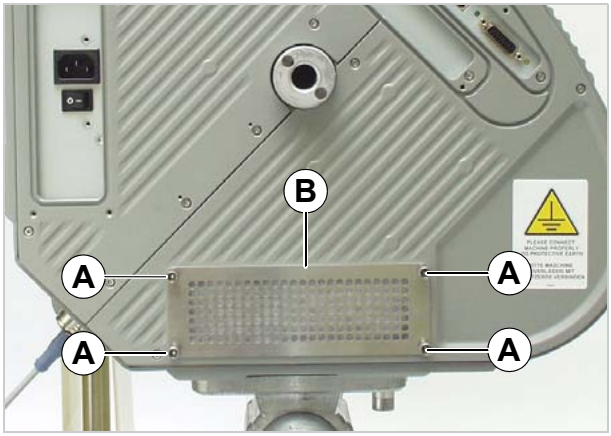

[69] Dust filter at an ALS 256/ALS 272.
A Thumb screws
B Filter cover

Operational failures

STATUS MESSAGES

Types of status messages

Error messages

When an error occurs, the machine stops immediately and displays an error message on the control panel.

Error messages are displayed as follows:

```
Status num:        5144
      Rewinder init
```

[70] An example of an error message:
5144 = status number; this number makes it easier to identify the message.
‘Rewinder init’ = status text; a brief description of the error.

Error messages that are not described here may only be resolved by a qualified service technician.

When an error occurs that is not described here:

→ Press the button ↵ to delete the message.

→ Switch the device off, wait 30 seconds and then switch it on again.

If the error reoccurs:

→ Request a service technician.

EXPERTS Error messages that are not mentioned here are described in the service manual.

Warnings

Warnings indicate less severe status than error messages. The labelling is not interrupted by a warning.

Warning format:

```
ONLINE
Material low
```

[71] Example of a warning:
„Materialend warn.“ = Warning text; a short description of what has caused the warning.

Setting back a warning:

→ Press the ↵ key (works earliest with firmware versions > 1.10).

List of warnings

Displayed text	Meaning
Productstartwarn	New start signal during the dispensing operation. Or: Several missing labels on the web, which can not be compensated.
APSF speed warn.	EXPERTS The conveyor speed exceeded the max. speed of the dispenser.
OD sensor warn.	*External OD-control*: Critical material roll diameter is reached.
Material low	*Internal OD-control*: Critical material roll diameter is reached.
Toomany products	EXPERTS Too many products between sensor and dispensing edge.
Rew. stop warn	EXPERTS The material rewinder was switched off by the operator.
Tandem Synch.	Communication between master and slave machine is not working. The warning can for example show up shortly after switching the machine on, when the communication between the machines is *not yet* established. If the communication is *still* established within 5 minutes after the warning showed up, the warning will disappear, otherwise, after the 5 minutes are over, the error message „Tandemsynch.init“ will appear, see 5147 on page 73. The warning has the same causes as the error message.
PLC warning	EXPERTS External warning.

List of error messages

Status	Status text	Cause	Action to take
5000	Bus device	Device at I²C Bus cannot be contacted. In most cases, this message appears as the first in a series of two or three messages which narrow down the error more precisely.	Delete the message by pressing the ↵ -key. Switch the machine off, wait 30 seconds and switch it back on. If the error message appears repeatedly, call in a servicing technician.
5001	No gap found	Material end, if no outer diameter (OD) control is activated. The maximum limit for missing labels was exceeded (LABEL SETUP > Miss. label tol.). The machine is not correctly set for the type of label (MACHINE SETUP > Label sens. type). Label length is not correctly set (LABEL SETUP > Label pitch). Photoelectric label sensor is dirty. Photoelectric label sensor is incorrectly positioned. Photoelectric label sensor is not connected correctly. Photoelectric label sensor is defective. Rotary encoder is not adjusted correctly.	Check the points listed above and correct if necessary. Press the ↵ key to confirm the error message.
5002	Material end	Material end (if the internal OD-control is activated).	Insert new label roll.
5030 5031	MotorProtectFeed MotorProtectRew.	(ALS 256/ALS 272) Dust filter liner exhausted. This leads to overheating the machine. (ALS 20x) Voltage selection switch set faulty. There are some more possible causes, which require a qualified service technician to cure.	Renew the dust filter liner. Let the machine cool down Check setting of the voltage selectioin switch. Switch the machine off, wait 30 seconds and switch it back on. If none of the above listed actions is successful, search for technical assistance.
5071	Material end unw	Occurs during operation with activated *internal* OD control. The message appears, if the material roll diameter has reached the critical value (setable by MACHINE SETUP > Materialend err).	Replenish the material roll .

Status	Status text	Cause	Action to take
5072	Material end unw	Occurs during operation with activated *internal* OD control. The message appears, if no rotation of the mate-rial roll has been registered during at least 600 mm of material feeding.	Check the material feeding; if necessary, replenish the material roll.
5111	OD sensor error	Occurs during operation with activated *external* OD control, when the light barrier is interrupted, or when no light barrier is connected. The material roll has reached the critical roll diameter. The dispenser will soon run out of label stock.	Be prepared to insert a new label roll. Check, if the light barrier of the external OD control is connected.
5140	Rewinder control	Rewinder control During problem-free operation, the rewind unit dancer arm only moves a minimal distance around the "control position". This is the position the dancer arm takes up after initialisation of the machine. Any force applied that moves the dancer arm from its control position. Example: The feed motor is blocked; the backing paper is not conveyed quickly enough; as a result the dancer arm is pulled upwards. Example: The backing paper is torn; the dancer arm springs downwards.	Press the ↵ key. This reinitialises the dancer arm control; the dancer arm moves back into the control position.
5143	Rewinder stop	This message appears when the dancer arm was held against its upper stop for more than two seconds. Effect: Power to the rewinder motor is switched off, so that the rewinder can be turned easily by hand. This effect is helpful when installing a new label roll, because the rewinder can be turned easily.	Press the ↵ key to confirm the error message.

Status	Status text	Cause	Action to take
5145	Rewinder full	This error can only occur if the end of a new label roll was glued on to backing paper that had already been wound onto the rewinder. The maximum permitted diameter (205 mm) for the rewinder roll has been reached.	Remove the rewound backing paper Press the ↵ key to confirm the error message.
5147	Tandemsynch.init	This message can only appear during tandem operation. Communication between the master and slave machines is not functioning.	Check, if the slave machine had been switched on before the master machine - if not, repeat the switching on in the correct order (first slave, then master). Check, if both machines are connected with the tandem interface cable - if not, connect them. For detailed information, contact a service technician.
5152	Winding direct.	The backing paper end is not correctly attached to the rewinder mandrel.	Attach the backing paper web to the rewinding mandrel as described in chap. Fastening the label roll to the rewinder on page 51.
5200	Home position	This message may appear when operating the applicator. The applicator did not reach its home position (upper end position) within the intended time-frame.	
		Applicator operation set, but no applicator available.	Set SIGNAL INTERFACE > Interface mode to „PLC signals“.
		The applicator is stuck.	Remove any obstructions
		Compressed air applicator: Compressed air supply interrupted or switched off.	Check compressed air connection and reconnect correctly if necessary.
		Cable not correctly connected.	Check cable and connect correctly if necessary.
5201	Touch down	The applicator lower end position (Touch Down) was not reached in time.	
6002	New prog. vers.	New firmware has been loaded. This is a message from the labeller that new firmware is available.	Press the Online button to confirm. All parameters are reset to their factory settings.
6030	New parameters	New firmware was loaded with the result that new functions have been added to the menu.	Press the Online button to confirm. Automatic reset is performed. All parameters are reset to their factory settings.

Status	Status text	Cause	Action to take
6207	No file card	No external memory medium was found.	Check whether an external memory medium (e. g. USB thumb drive) is connected. If the memory medium was not connected until after the machine was switched on: Switch the machine off and back on again.
9022	No network link	This status message can only appear when Ethernet address assignment is set to DHCP (INTERFACE PARA >NETWORK PARAM. > IP Addressassign). The cause is almost invariably an incorrectly plugged-in network connector.	Check whether the network connector is plugged in correctly, correct if necessary.

EU Declarations

EU DECLARATION OF CONFORMITY

(Translation of original version)

We,

Novexx Solutions GmbH
Ohmstraße 3
D-85386 Eching
Germany

hereby declare that we have designed and built the machine designated below so that it is in conformity with the basic safety and health protection requirements of the directive named below:

Models	ALS 204 / ALS 206 / ALS 209 / ALS 256 / ALS 272
General designation	Labeler
Applicable EU directive	2014/30/EU (EMC Directive) 2011/65/EU (RoHS Directive)
Applied harmonized standards, especially	EN 55032 : 2012 class A EN 61000-6-2 : 2005 EN 61000-3-2 : 2014 EN 61000-3-3 : 2013

Eching, 21.06.2017

Manfred Borbe (Director)

EU DECLARATION OF INCORPORATION

(Translation of original version)

We, Novexx Solutions GmbH
Ohmstraße 3
D-85386 Eching
Germany

hereby declare that the partly completed machine designated below has been designed and built in such a way as to be in conformity with the safety and health protection requirements of directive 2006/42/EC, annex I, which are marked „fulfilled“ in the following table „Appendix regarding the Declaration of Incorporation“.

The special technical documents in accordance with appendix VII part B of directive 2006/42/EC have been created. We undertake to forward the special technical documentation in respect of the partly completed machine to national authorities at their request. We shall submit them by means of electronic data carrier.

The partly completed machine designated herein is furthermore in compliance with the provisions of directive 2014/30/EU (EMC) and directive 2011/65/EU (RoHS).

The designated partly completed machine must not be placed in operation until it has been determined that the machine in which the partly completed machine has been installed is in compliance with the provisions of directive 2006/42/EG.

Models	ALS 204 / ALS 206 / ALS 209 / ALS 256 / ALS 272
General designation	Labeler
Applicable EU directive	2006/42/EC (Machinery Directive)
Applied harmonized standards, especially	EN ISO 12100 : 2010 EN 415-2 : 1999 EN 60950-1 : 2006/A2 : 2013
The person authorized to compile technical documents	Novexx Solutions GmbH (for address see above)

Eching, 21.06.2017

Manfred Borbe (Director)

APPENDIX REGARDING THE DECLARATION OF INCORPORATION

List of the essential health and safety requirements applied and fulfilled for the product named in the declaration of incorporation, relating to the design and construction of machinery.

Number Annex I	Designation	Not applicable	Fulfilled	Remark
1.1	**General remarks**			
1.1.2.	Principles of safety integration		X	
1.1.3.	Materials and products		X	
1.1.4.	Lighting	X		
1.1.5.	Design of machinery to facilitate its handling		X	
1.1.6.	Ergonomics		X	
1.1.7.	Operating positions	X		
1.1.8.	Seating	X		
1.2.	**Control systems**			
1.2.1.	Safety and reliability of control systems		X	
1.2.2.	Control devices		X	
1.2.3.	Starting		X	
1.2.4.	Stopping			
1.2.4.1.	Normal stop		X	
1.2.4.2.	Operational stop	X		
1.2.4.3.	Emergency stop		X	
1.2.4.4.	Assembly of machinery	X		
1.2.5.	Selection of control or operating modes	X		
1.2.6.	Failure of the power supply		X	
1.3.	**Protection against mechanical hazards**			
1.3.1.	Risk of loss of stability		X	
1.3.2.	Risk of break-up during operation		X	
1.3.3.	Risks due to falling or ejected objects		X	
1.3.4.	Risks due to surfaces, edges or angles		X	
1.3.5.	Risks related to combined machinery	X		
1.3.6.	Risks related to variations in operating conditions	X		
1.3.7.	Risks related to moving parts		X	
1.3.8.	Choice of protection against risks arising from moving parts			
1.3.8.1.	Moving transmission parts		X	
1.3.8.2.	Moving parts involved in the process			Requires protective device [a]
1.3.9.	Risks of uncontrolled movements	X		
1.4.	**Required characteristics of guards and protective devices**			
1.4.1.	General requirements			a
1.4.2.	Special requirements for guards			
1.4.2.1.	Fixed guards	X		
1.4.2.2.	Interlocking movable guards			a
1.4.2.3.	Adjustable guards restricting access	X		
1.4.3.	Special requirements for protective devices	X		
1.5.	**Risks due to other hazards**			
1.5.1.	Electricity supply		X	
1.5.2.	Static electricity		X	
1.5.3.	Energy supply other than electricity		X	

Number Annex I	Designation	Not applicable	Fulfilled	Remark
1.5.4.	Errors of fitting		X	
1.5.5.	Extreme temperatures		X	
1.5.6.	Fire		X	
1.5.7.	Explosion	X		
1.5.8.	Noise		X	
1.5.9.	Vibrations	X		
1.5.10.	Radiation		X	
1.5.11.	External radiation		X	
1.5.12.	Laser radiation	X		
1.5.13.	Emissions of hazardous materials and substances	X		
1.5.14.	Risk of being trapped in a machine	X		
1.5.15.	Risk of slipping, tripping or falling	X		
1.5.16.	Lightning	X		
1.6.	**Maintenance**			
1.6.1.	Machinery maintenance		X	
1.6.2.	Access to operating positions and servicing points		X	
1.6.3.	Isolation of energy sources		X	
1.6.4.	Operator intervention		X	
1.6.5.	Cleaning of internal parts	X		
1.7.	**Information**			
1.7.1.	Information and warnings on the machinery		X	
1.7.1.1.	Information and information devices	X		
1.7.1.2.	Warning devices	X		
1.7.2.	Warning or residual risks		X	
1.7.3.	Marking of machinery		X	
1.7.4.	Instructions		X	
1.7.4.1.	General principles for the drafting of instructions		X	
1.7.4.2.	Contents of the instructions		X	
1.7.4.3.	Sales literature		X	

a) Installation by the system integrator

Novexx Solutions GmbH
Ohmstraße 3
85386 Eching
Germany
☎ +49-8165-925-0
www.novexx.com