NOVEXX SOLUTIONS

USER MANUAL

TCS for XLP 504/514

Cutter-Stacker

Edition 5b - 8/2021

Contents

Please note!

GENERAL INFORMATION

Validity of this manual and required compliance

Contents

This Operating manual refers exclusively to the Cutter-Stacker TCS. It is intended to help in proper installation, operation and adjustment of the machine.

For technical questions that are not addressed in this Operating manual, please contact the manufacturer, NOVEXX Solutions.

NOVEXX Solutions customer service department is available especially for configuration settings and malfunctions.

Liability

NOVEXX Solutions reserves the right:

- To make changes in design and components, and to use equivalent other parts than those specified in line with technological progress.
- To change information in this manual.

Any obligation to extend these changes to machines previously delivered is excluded.

Copyright

Printed in Germany

Manufacturer

Novexx Solutions GmbH

Ohmstrasse 3

D-85386 Eching, Germany

Tel.: +49-8165-925-0

Fax: +49-8165-925-231

www.novexx.com

How information is represented

Explanation of symbols

To enhance readability and make information easier to find, different types of information are identified:

► Instruction with no order of tasks assigned

1. Numbered instructions introduced by preceding text

2. The specified order must be followed!

‖ Special note for action that must be performed. ‖

- Enumeration of features
- Other feature

EXPERTS The Experts symbol identifies activities that are reserved exclusively for qualified and specially trained personnel.

Warning Notes

Warning notes are specially highlighted::

WARNING!
Warning notes with the signal word WARNING refer to risks that can result in severe or fatal injuries! The note contains safety measures to protect affected persons.
► Instructions must be followed without exception.

CAUTION!
Warning notes with the signal word CAUTION refer to risks that can result in property damage or personal injury (minor injuries). The note contains instructions for preventing damage.
► Instructions must be followed without exception.

Illustrations

Illustrations appear in the text where required. References to the illustrations are shown in brackets, if necessary (see table).

Reference to illustration	Application
none	• Only one illustration • Reference to the illustration is obvious • No position number in the illustration
(A)	• Only one illustration • Reference to the illustration is obvious • Position number in the illustration
(see fig. above)	• Several illustrations • No position number in the illustration
(see fig. above, pos. A)	• Several illustrations • Position number(s) in the illustration

Table 1: Different references to illustrations.

Parameters

Parameters in the parameter menu are represented in the format Menu name > Parameter name in grey type.

SAFETY INSTRUCTIONS

WARNING!
Danger of cuts to hands and fingers!

- ► Do not remove protective equipment.
- ► Do not bypass protective equipment.
- ► Switch off the printer before installing the TCS.
- ► Take care to avoid touching the cutters even when the device is switched off.

CAUTION!
Risk of damage to the cutter blades!

- ► Do not clean the cutters with sharp objects.

PROTECTIVE EQUIPMENT

The TCS has the following protective equipment to protect the operator from personal injury due to cuts or crushing.

► After all service work, check that the protective equipment has been installed again and is fully functional:

Protective equipment	Figure	Function	Inspection
Front Perspex cover	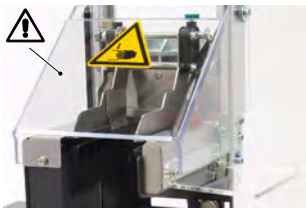	Prevents access to the cutter. Opening of the cover during (printing/ cutting) operation stops the printer and stacker.	A visual check is sufficient: Cover closed? Function check: The printer and TCS must stop if the cover is opened during (printing/cutting) operation.
Cover switch	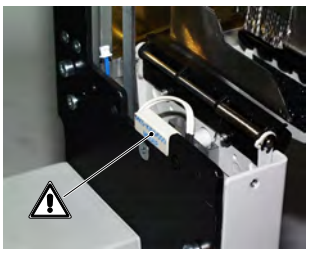		
Rear Perspex cover	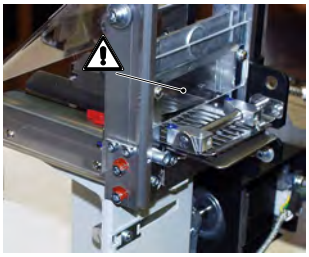	Prevents access to the cutter.	A visual check is sufficient: Is the cover in position?
Lateral Perspex cover	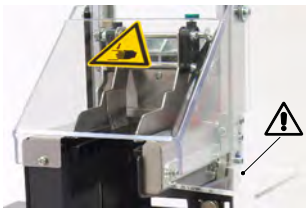		
Intrusion protection at the cutter	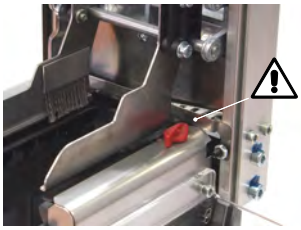		

WARNING SYMBOL ON TCS

CAUTION!
Warning symbols on the device provide important information for the operating personnel.

- ► Do not remove warning symbols.
- ► Replace missing or illegible warning symbols.

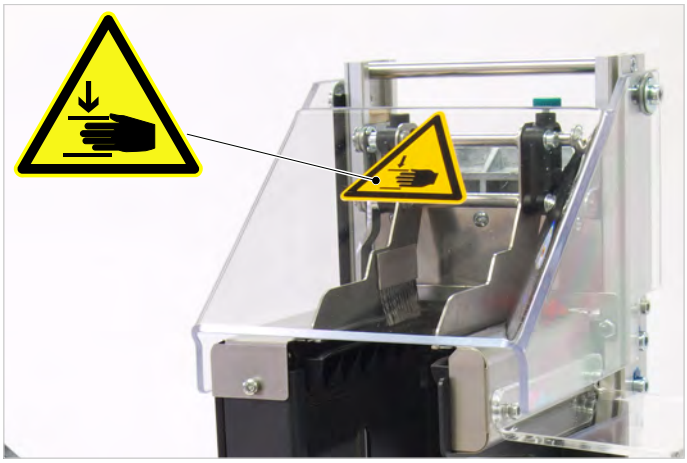

Fig. 1: Position of the warning sticker on the TCS.

Warning symbol	Meaning	Order No.
	The warning symbol “Danger of hand injuries” warns of dangerous movements of the device that could lead to hand injuries.	A103530

Table 2: Meaning of the warning symbols.

Product description

INTENDED USE

The TCS is an additional device for XLP 504 and XLP 514 label printers (hereinafter referred to as “printer”) from NOVEXX Solutions.

The designation TCS is the abbreviation for Textile Cutter-Stacker and indicates the main field of application of the device, namely the cutting and stacking of textile label materials.

In addition to textile materials, the TCS also cuts and stacks self-adhesive and cardboard materials – under the following condition:

> The TCS is not suitable for the alternating processing of textile and cardboard or self-adhesive material. Use either textile material or cardboard or self-adhesive material. The latter material types tend to blunt the cutter slightly – it is then no longer suitable for cutting textile material.

For details of the label materials approved for processing in the TCS, please refer to the TCS product information.

Information on permissible label dimensions, maximum stacking height, etc. can be found in chapter “Technical data”.

The TCS is bolted firmly to the printer. It requires no separate power supply; it is connected to the printer by means of a plug connector and is supplied with power via the printer. The TCS can be attached and removed without the use of tools.

The controller of the TCS is integrated into the firmware of the printer. The cutting process is triggered by one of the following possibilities:

- Press a button on the printer operation panel
- Easy Plug command in the print job (#ER or #CIM)

Working position: The TCS is an attachment for a tabletop printer. The stacking direction is therefore vertically from top to bottom.

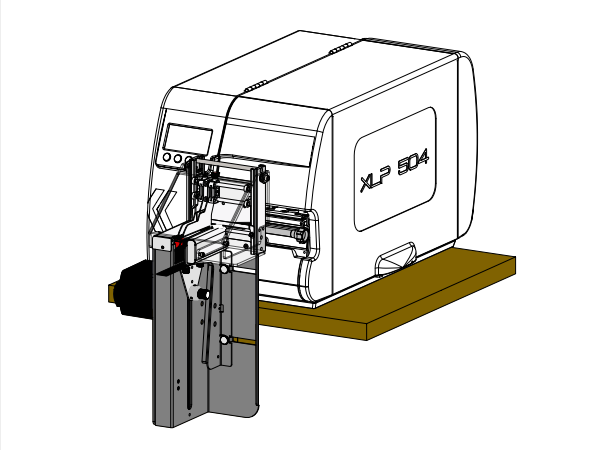

Fig. 2: Working position of a XLP 504 with TCS.

Any other type of or more extensive application will be considered non-intended use. NOVEXX Solutions assumes no liability for damage resulting from any form of non-intended use of the device.

OPERATING COMPONENTS

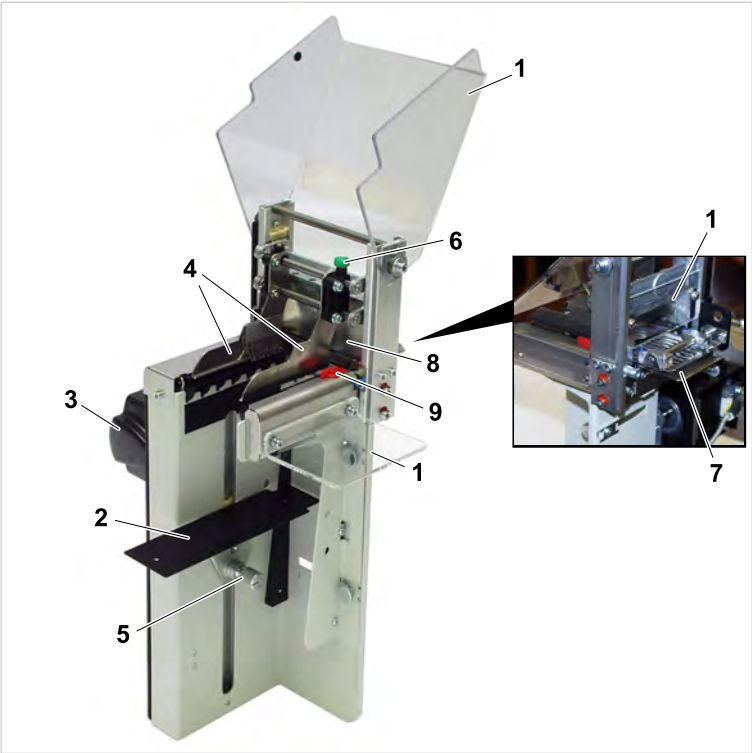

Fig. 3: Operating components on the TCS.

Item	Description
1	*Protective equipment* that prevents reaching into the device during operation, see chapter "Protective equipment" on page 6
2	*Material support*: The cut labels are stacked here. The stack grows as the material support is pressed down by the stack. When the stack is full, the material support is completely down where it trips a switch that stops the printer.
3	*Motor*: Drives the cutting/stacking movement
4	*Pushers:* The pushers are coupled to the cutter. At each stroke, a label is cut off and pressed down by the pushers onto the stack.
5	*Setting knob* for the force with which the material support counters the pressure from above.
6	*Thumb screw*: Fixes the right-hand pusher on the shaft. The position of the right-hand pusher must be adapted to the material width.
7	*Material guides*: The label material coming from the printer is guided between these two plates.
8	*Upper cutter*: The upper half of the cutter that moves down at each stroke.
9	*Limit stop*: Simplifies the setting of the correct distance for the right-hand pusher.

FUNCTIONALITY

The printing-cutting-stacking cycle step-by-step:

1. A label is printed, pushed forward and cut off.
2. As the upper cutter moves downwards, the two pushers press at the same time from above onto the cut label and press it onto the material support.
3. Upper cutter and pusher move up again.

   The cut label is held on the material support by the two lateral Velcro tapes.

As soon as the stacker is full, i.e. the material support has reached the lower end point, a microswitch is tripped and stops the printer; the following status messages appears on the control panel:

```
Status: 5560
TCS full / cover
```

TECHNICAL DATA

Specifications

Material width	Textile material: 15 to 53 mm Self-adhesive material: 20 to 53 mm Cardboard material: 25.4 to 53 mm
Label length	30 to 120 mm
max. stacking height	150 mm
Interchangeable labels	adjustable
Noise level	70 dB(A) (total noise level of TCS and printer)
Electrical data	Motor voltage: max. 48 V Light barrier voltage: 5 V
Ambient conditions	Operating temperature: 5-35°C Relative humidity: 45-75%, non-condensing

Textile materials

Globally, a significant offering of textile materials is available. Basically, these materials are made of nylon, polyester or satin. Materials can be uncoated or (double sided) coated. Within these materials, multiple qualities can be selected. Based on the final product in which the label is used, materials have a quality at low price up to quality at high price.

The differences is material quality will generally have an effect on:

- Print quality
- Cut quality
- Wash resistance

Furthermore, materials can have specific features such as

- OEKO-Tex class
- Automotive useage
- Chemical resistance

- Fire resistance

The major manufacturers of thermal transfer print ribbons also have ribbons for printing of textile materials available.

Due to this large selection and combinations of materials and ribbons, it is impossible to give a recommendation to which materials and ribbons should be used with the TCS. It is mandatory to test upfront any combination as requested by the customer/end-user prior to sales, to ensure the combination works smoothly and delivers the required results.

NOVEXX Solutions has tested 2 material qualities in combination with a textile print ribbon on XLP 504 300 dpi with TCS. These combinations have shown good print- and washs results under defined printer settings.

Item number	Material	Specifications	Typical applications
On request [1]	Nylon	Coated (one side) OEKO-Tex class 1	Infant wear Underwear Dress & Tailoring
On request [1]	Polyester	Coated (double side) OEKO-Tex class 1	
30177-400-xxx-xx [2]	Textile ribbon	Resin	

1 Depends on the required material width

2 xxx-xx : depends on the ribbon width

SYSTEM REQUIREMENTS XLP 504 FOR TCS

The XLP 504 must be equipped not only with the necessary firmware version, but also with a few special parts in order to be able to be operated together with a TCS. This “XLP 504 for TCS“ can be ordered ready for operation or retrofitted from an XLP 504 “Basic” or XLP 504 “Peripheral”.

Necessary firmware version

7.75

Necessary parts

The following parts must be available for operation of a XLP 504 with TCS:

Item	Name	Note
1	TCS	
2	Mounting for TCS	
3	Sub-D cable harness	Different part than in XLP 504 “Peripheral”
4	Enclosure part	
5	M5A output stage	Different part than in XLP 504 “Peripheral”

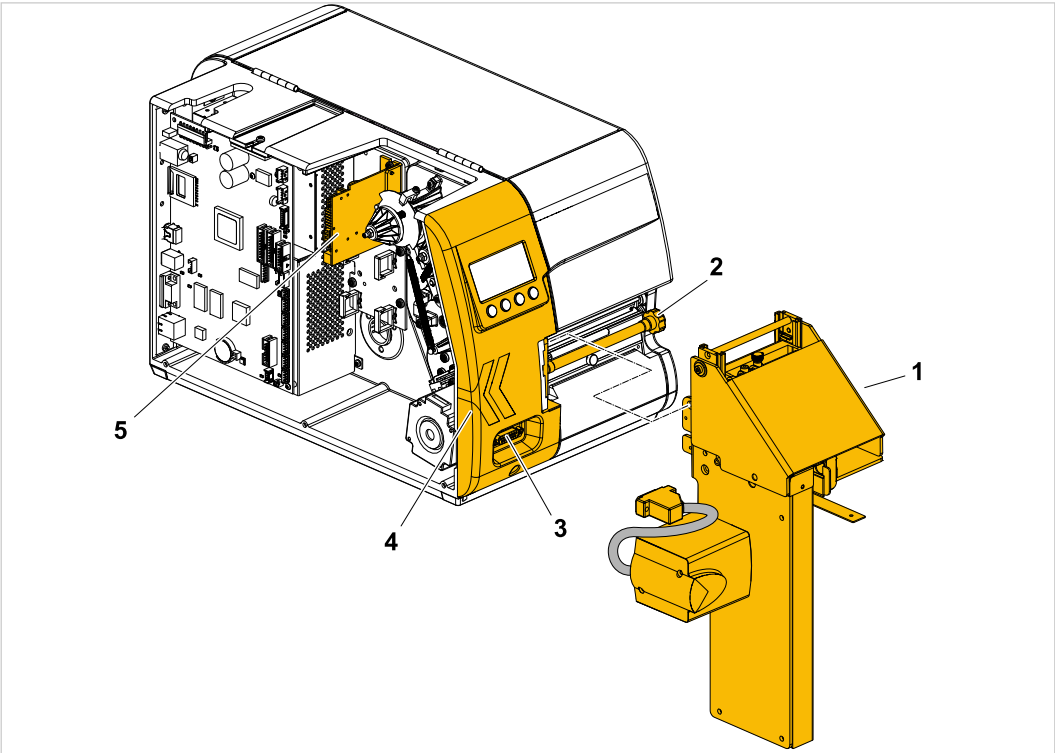

Fig. 4: The parts marked in colour are required for operation of a XLP 504 with TCS and are included in the conversion kit.

Conversion kit for the XLP 504

(Output) printer	Conversion kit TCS	Remaining parts
XLP 504 “Basic”	N101208	Enclosure part
XLP 504 “Peripheral”		M4A output stage, wiring harness, enclosure part

The XLP 504 “Basic” is recommended for retrofitting as then less parts are left over after retrofitting.

SYSTEM REQUIREMENTS XLP 514 FOR TCS

The XLP 514 must be equipped not only with the necessary firmware version, but also with a few special parts in order to be able to be operated together with a TCS. This “XLP 514 for TCS“ can be ordered ready for operation or retrofitted from an XLP 514 “Basic” or XLP 514 “Peripheral”.

Necessary firmware version

MAR-V3.0

Necessary parts

The following parts must be available for operation of a XLP 514 with TCS:

Item	Name
1	TCS
2	Mounting for TCS
3	Sub-D cable harness
4	Enclosure part
5	Stepper motor output stage

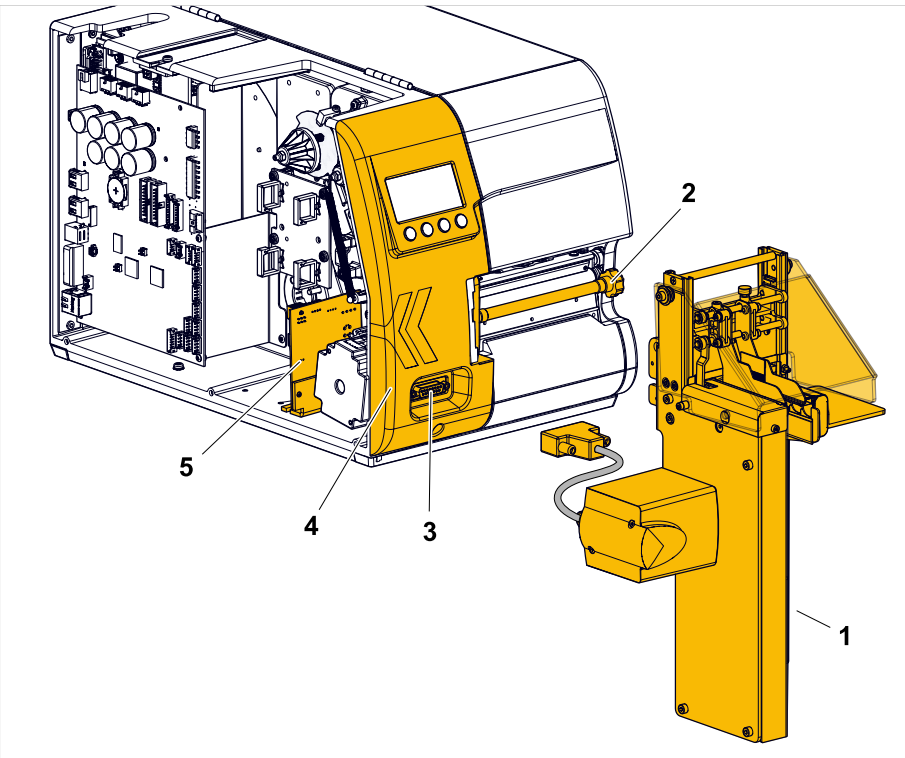

Fig. 5: The parts marked in colour are required for operation of a XLP 514 with TCS and are included in the conversion kit.

Conversion kit for the XLP 514

(Output) printer	Conversion kit TCS	Remaining parts
XLP 514 “Basic”	N103135	Enclosure part
XLP 514 “Peripheral”		Stepper motor output stage, wiring harness, enclosure part

The XLP 514 “Basic” is recommended for retrofitting as then less parts are left over after retrofitting.

Commissioning

INSTALLING CONVERSION KIT TCS IN XLP 504

Describes the conversion of a XLP 504 into a “XLP 504 for TCS” by installation of the “Conversion Kit TCS”.

WARNING!

This machine operates at mains voltage. Contacting electrically live components can cause lethal electrical shocks and burns!

► Only authorised technicians who are familiar with the associated hazards are permitted to carry out conversion work on the machine!

► Also read and observe the safety instructions in the service manual of the machine!

► After assembly, check the machine according to the applicable regulations of the relevant country (for Germany: DIN VDE 701-702 Recurrent test and test after repair and modification of electrical equipment).

Before you begin

Printer: XLP 504 “Basic”

Conversion kit TCS (N101208)

Tools:

- Torx screwdriver T10, T20
- Open-ended spanner, size 5
- Open-ended spanner, size7

Procedure

1. Remove the following enclosure parts: Front cover (1), rear cover (2), enclosure front left (3), plug cover (4) and flange cover (5).
   How? - See “Service Manual XLP 50x”, chapter “Service Mechanics” > “Housing components”.

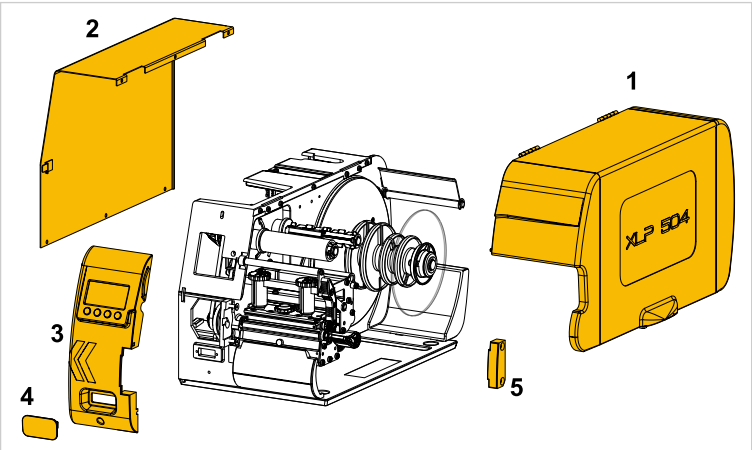

2. Remove control panel board (3) from the “Front left housing” (1) just removed and install in enclosure part (2) from the conversion kit.

   > Distinguishing feature: The enclosure part from the conversion kit has a larger opening for the mounting flange (see figure).

   How? - “Service Manual XLP 50x”, chapter “Service Mechanics” > “Replacing electronic components” > “Control panel board”.

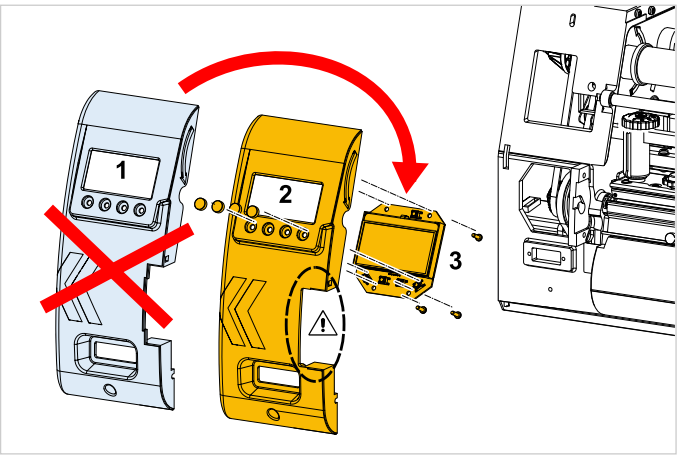

3. Install “Front left housing” with the installed control panel board on the printer.

   How? - See “Service Manual XLP 50x”, chapter “Service Mechanics” > “Housing components” > “Front left housing”.

4. Install sub-D cable harness:

   a) Remove the motor (1).

   b) Thread sub-D cable harness (2) through the opening in the enclosure.

   c) Route cables under the motor fastening inserts.

   d) Install the motor.

   For further details, see “Service manual XLP 50x”, chapter “Service Mechanics” > “Internal rewinder / dispenser” > “Retrofitting the internal rewinder” > “Installing the cable harness”.

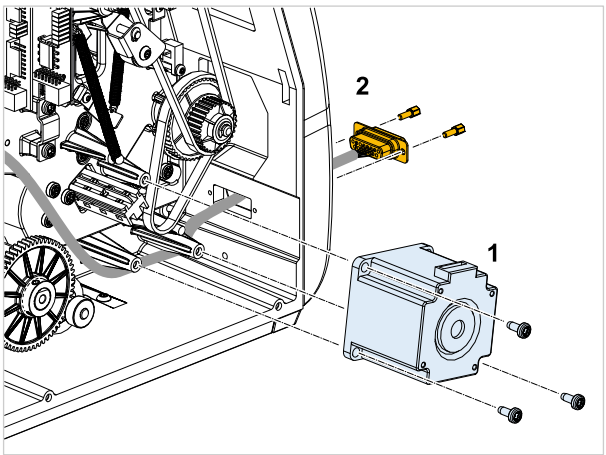

5. Install the output stage board M5A.
   (2 screws Torx DG 40 x 10)

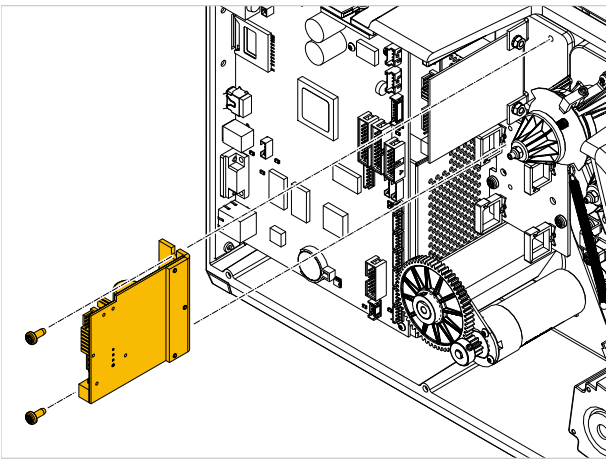

6. Connect Sub-D cable harness to the output stage board M5A as shown in the table:

Connect cable with mark	to connector	on board
motor	J3 motor	M5A output stage
sensor 1	J4 sensor 1	
aux	CN910 aux	CPU board
power	CN1202	

For further details see service manual XLP 50x, chapter “Appendix” > “Wiring diagrams” > “XLP 50x peripheral”.

7. Connect ribbon cable (D) to CPU board (B, CN602) and the output stage(s) (A, E). Fit hinged ferrite core (C) to the cable as illustrated.

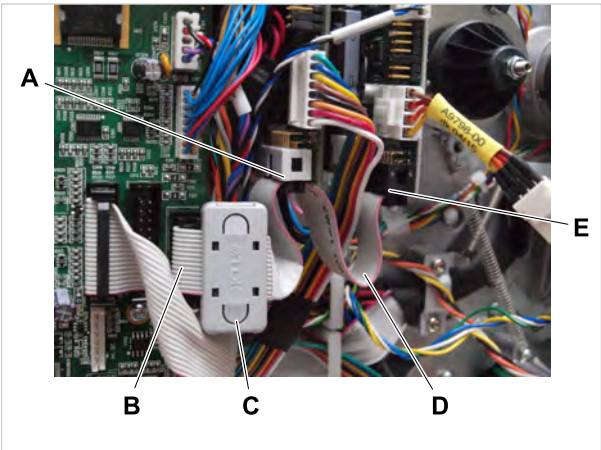

8. Close the printer enclosure again.

INSTALLING CONVERSION KIT TCS IN XLP 514

Describes the conversion of a XLP 514 into a “XLP 514 for TCS” by installation of the “Conversion Kit TCS”.

WARNING!

This machine operates at mains voltage. Contacting electrically live components can cause lethal electrical shocks and burns!

► Only authorised technicians who are familiar with the associated hazards are permitted to carry out conversion work on the machine!

► Also read and observe the safety instructions in the service manual of the machine!

► After assembly, check the machine according to the applicable regulations of the relevant country (for Germany: DIN VDE 701-702 Recurrent test and test after repair and modification of electrical equipment).

Before you begin

Printer: XLP 514 “Basic”

Conversion kit TCS (N103135)

Tools:

- Torx screwdriver T10, T20
- Open-ended spanner, size 5
- Open-ended spanner, size7

Procedure

1. Remove the following enclosure parts: Front cover (1), rear cover (2), enclosure front left (3), plug cover (4) and flange cover (5).

   How? - See “Service Manual XLP 51x”, chapter “Parts replacement” > “Housing parts”.

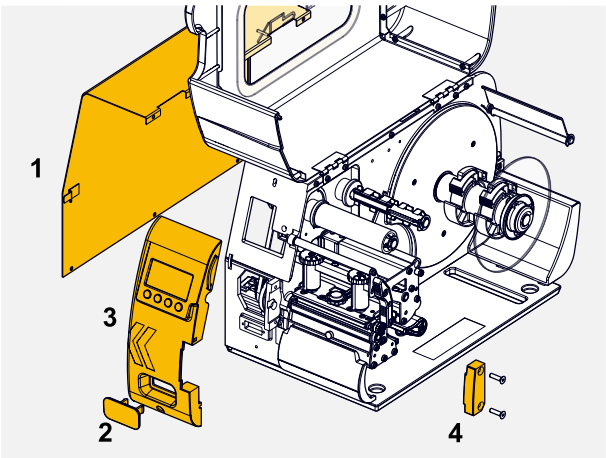

2. Remove control panel board (3) from the “Front left housing” (1) just removed and install in enclosure part (2) from the conversion kit.

   > Distinguishing feature: The enclosure part from the conversion kit has a larger opening for the mounting flange (see figure).

   How? - “Service Manual XLP 51x”, chapter “Parts replacement” > “Elektronic components” > “Operation panel board replacement”.

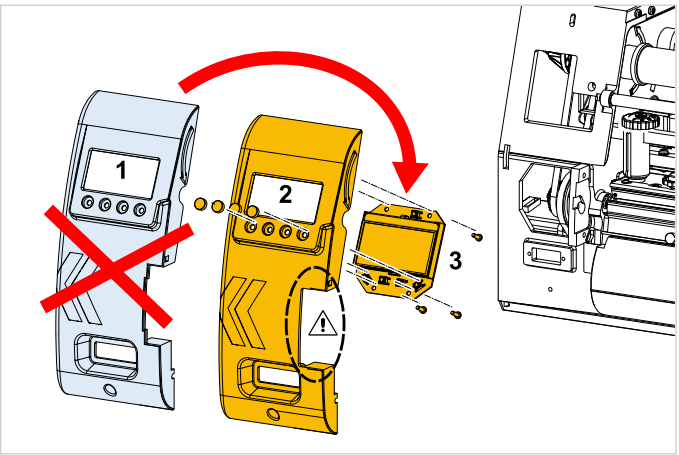

3. Install “Front left housing” with the installed operation panel board on the printer.

   How? - See “Service Manual XLP 51x”, chapter “Appendix” > “Parts replacement” > “Housing parts” > “Front left housing replacement”.

4. Install sub-D cable harness:

   a) Remove the motor (1).

   b) Thread sub-D cable harness (2) through the opening in the enclosure.

   c) Route cables under the motor fastening inserts.

   d) Install the motor.

   For further details, see “Service Manual XLP 51x”, chapter “Appendix” > “Retrofitting from “Basic” to “Peripheral”” > “Front left housing”.

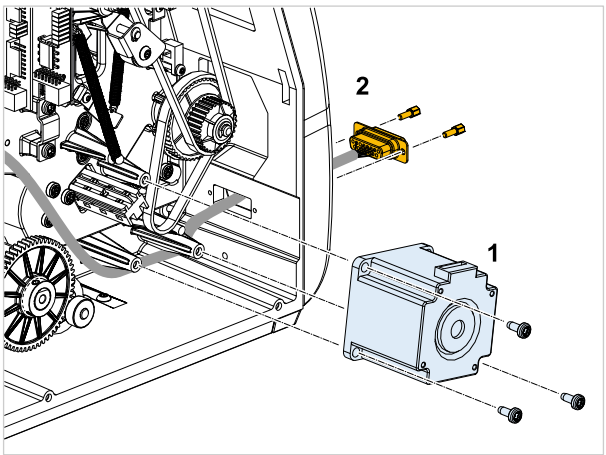

5. Screw on the stepper motor output stage board (A) with the 2 enclosed screws (B, Torx M4x8).

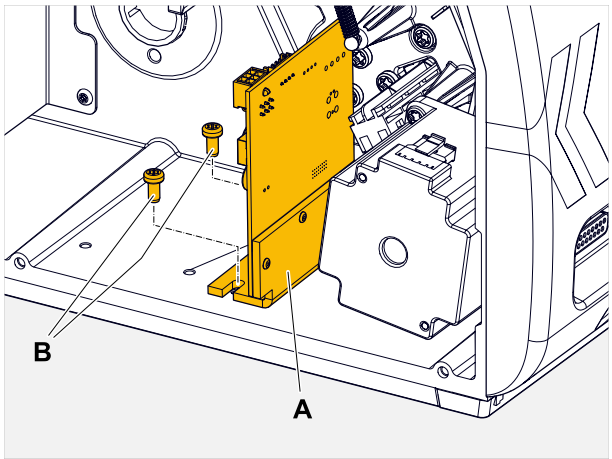

6. Connect the sub-D cable harness according to the illustration:

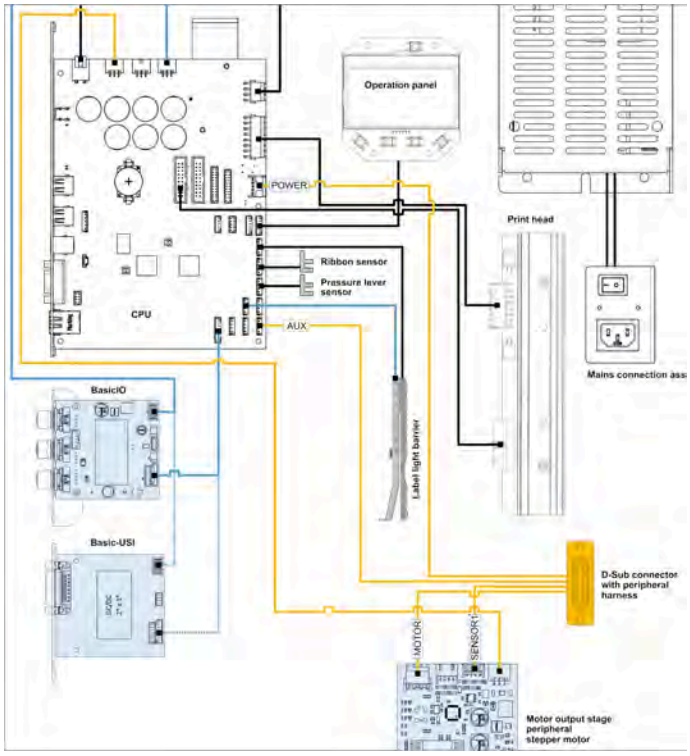

Complete wiring diagram: see service manual XLP 51x, chapter “Electronics Description” > “Wiring diagram”.

7. Connect the remaining cable from the kit to the stepper motor output stage board and to the CPU board (picture above).

8. Close the printer enclosure again.

INSTALLATION OF TCS

Describes how the TCS is installed on the “XLP 504 for TCS” or on the “XLP 514 for TCS”.

Before you begin

- “XLP 504 for TCS” or “XLP 514 for TCS” is available
- TCS is available

Tools:

- Hex socket driver 4 mm

Procedure

1. Remove tear plate (1) by loosening thumb screw (2).

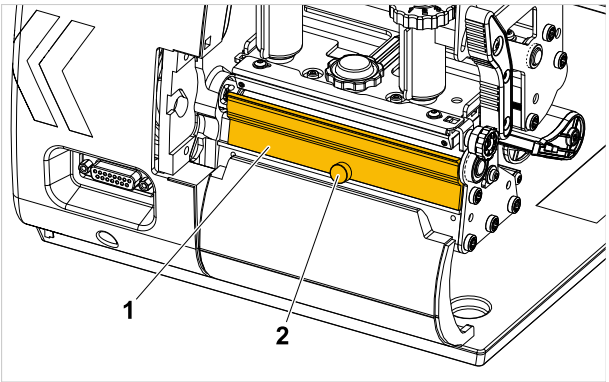

2. Fasten holder (1) with the two screws (2) to the flange of the printer.

   The bore (3) must be facing downwards.

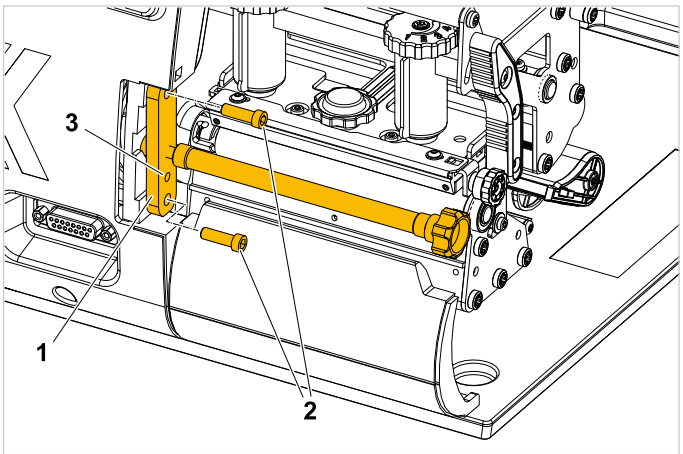

3. Unscrew the shaft until it has a clearance of roughly 2 cm at the foot end.

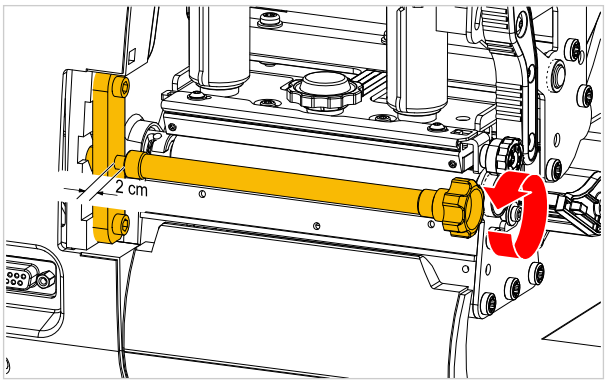

4. Hook the mounting flange of the stacker into the stacker connection by pushing the bore of the flange over the upper screw head of the connection (arrow 1). At the same time, swing the opening in the stacker connection over the stud bolt that holds the shaft (arrow 2).

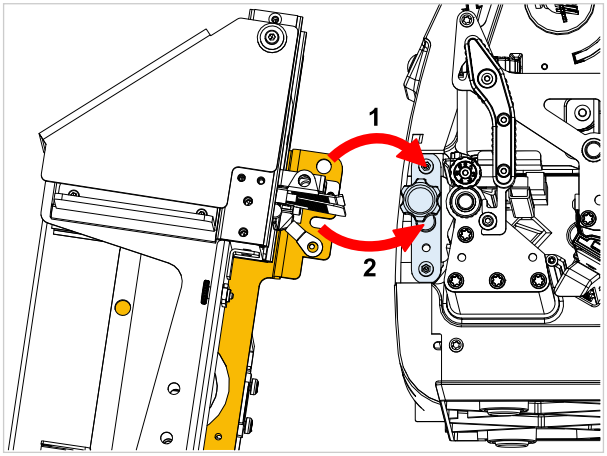

5. Hold the stacker in position and fix by tightening knurled handle (1).

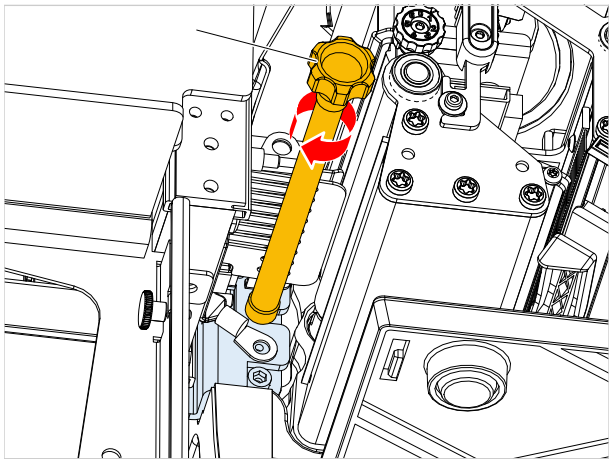

6. Connect the plug of the stacker to the 15-pin socket on the front side of the printer. Tighten the two locking screws by hand or with a screwdriver.

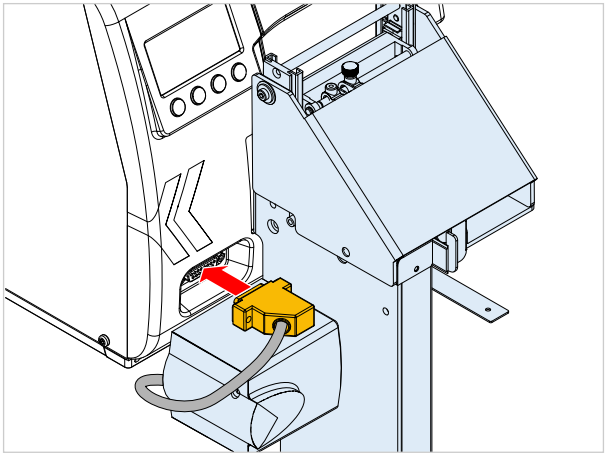

SETTINGS IN THE PARAMETER MENU

Describes the settings necessary in the parameter menu of the XLP 504/XLP 514 for operation of the TCS.

As soon as “TCS” is selected as peripheral device, the printer is rebooted and the submenu Options > TCS appears with parameters for the setting of change labels.

> If the TCS is activated without label material being inserted into the light sensor at the material guide of the TCS, the following status message shows up:
>
> ```
> Status num: 5059
> Stacker fail
> ```
>
> The status message can also have different causes. For details refer to chapter “Status messages” on page 28.

> *Change labels* are printed as the last label of a print job. They are slightly longer than the other labels and therefore protrude out of the label stack. These labels allow the operator to easily identify the beginning and end of each job in the stack after a number of print jobs.

Submenu	Parameter	Setting	Mandatory
Options > Selection	Periph. device	TCS	X
Options > TCS	Changelabel Mode	Easyplug select	
	Changelab Length	10	
	Changelab Print	With print	
	Label Eject Mode	No	

Table 3: List of the most important parameters for stacker operation. The parameters marked “Mandatory” must be set as shown in order that the TCS functions. The settings for the other parameters are given as recommendations and can be changed, depending on the application.

> For further information on parameter settings, refer to...
>
> - the Operating manual XLP 504, chapter “Parameter menu”
> - the Operating manual XLP 514, chapter “Product Description” > “Parameter menu”

Operation / Malfunctions / Cleaning

OPERATION

Adjusting TCS

Before operation, the TCS must be adjusted to the width of the material used.

Before you begin

Preparatory work:

- Measure the material width if it is not already known.
- Raise Perspex cover (1).
- Loosen thumb screw (2) and push right-hand pusher (3) completely to the left.
- Loosen the 2 thumb screws (5).

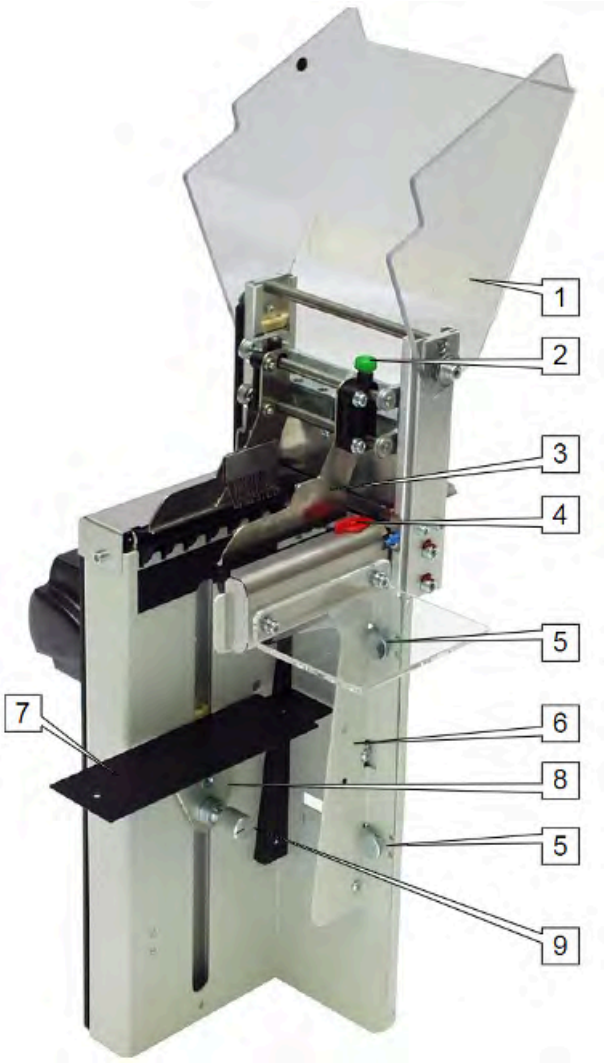

Procedure

Sets the material width:

1. Move side section (6) until its right-hand edge is aligned with the measured material width on the scale.

   Uneven dimensions are always at the bottom of the scale, even dimensions at the top.

2. Tighten the 2 thumb screws (5).

Adjusting material support:

3. Install a material support plate (7) corresponding to the material width.

   The following material support plate are included in the scope of supply:15-18 mm, 18-22 mm, 22-28 mm, 28-35 mm, 35- 40 mm, 40-53 mm.

4. Adjust material support holder (8) with adjusting screw (9) so that it is tight enough not to be pushed down by the weight of the stacked material.

5. Push material support holder (8) completely to the top.

Setting the pusher:

6. Turn the tip of stop (4) to face the pusher (3) as shown in the figure.

7. Push pusher (3) up to the tip of the pointer.

8. Tighten thumb screw (2).

9. Turn back stop (4).

10. Lower Perspex cover (1).

Threading in material

Before you begin

Material is inserted into the printer.

Procedure

1. Open the printhead pressure lever at the printer.
2. Push the material end (1) between the slide plates (2).

   The label material must run with the left edge through the light sensor (3), otherwise an error message occurs (error messages see chapter "Status messages" on page 28).

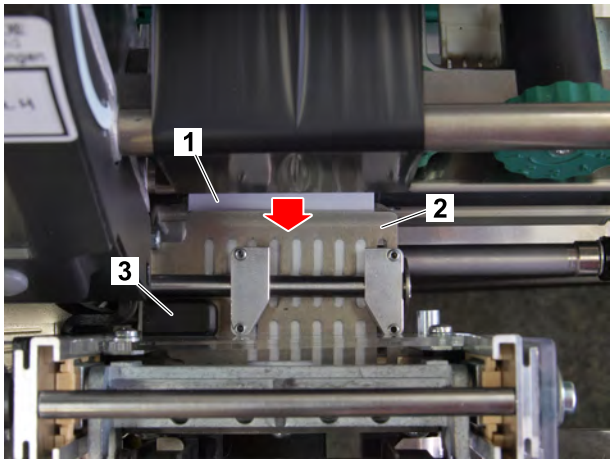

3. Push the material forward until roughly one centimetre protrudes from the stacker.

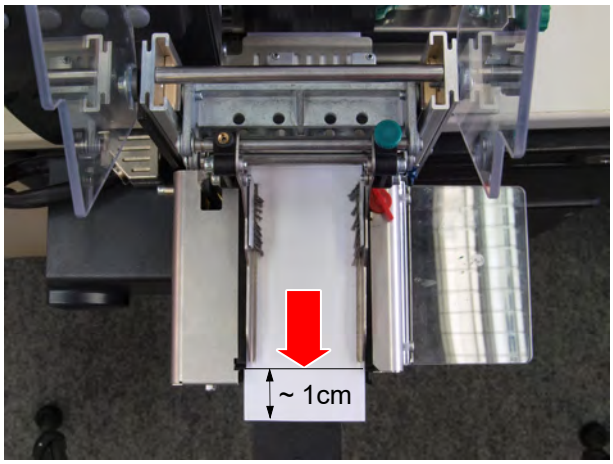

Switching the TCS on/off

The TCS is switched on/off together with the printer. Precondition for this is, that the TCS is mounted, connected and activated in the printer menu.

> If the printer is switched on without label material being inserted into the light sensor at the material guide of the TCS, the following status message shows up:
>
> ```
> Status num: 5059
> Stacker fail
> ```
>
> The status message can also have different causes. For details refer to chapter “Status messages” on page 28.

The cutting/stacking cycle can be started at the push of a button or automatically via the print job.

Triggering cut by hand

1. Switch to the “Home” display.
2. Press the button under the symbol .

Triggering cut automatically

► Integrate the Easy Plug command #ER or #CIM into the print job with the corresponding parameters or make the necessary setting in the label layout software.

> A knowledge of the Easy Plug command language is necessary for creating print jobs without layout software. See the Easy Plug manual for further information.

REMEDYING MALFUNCTIONS

Status messages

Malfunctions in the TCS generally have one of the following causes:

- The TCS is prevented from moving
- The sensors that limit the movement of the TCS are defective, soiled or not correctly connected
- Material jam

Status message	Cause	Measure
5059 Stapler Fehler	The error occurs, if one or more of the following conditions apply: • Stacker full, that is material support moved completely to the bottom (limit switch triggered) • Protective hood open (reed contact triggered) • No material in the material feeder (light sensor open)	Ensure that none of the three possible causes applies. ► Empty the stacker and push the material support to the top ► Close the protective hood ► Refill material or clear material jam (Material must run throught the light sensor) EXPERTS ► If none of the causes described here are discovered, please contact a service technician

Status message	Cause	Measure
5005 Messer	Cutter motor cannot rotate into its home position (cam in light barrier)	EXPERTS ► Check what is preventing the motor from reaching its home position. Remedy the cause.

CLEANING

Safety

WARNING!
Sharp cutter blades!
Risk of finger cutting due to the cutter blades!

► Clean the cutter blades with great care and only with the printer switched off.
► Operate the TCS only when it is firmly installed on the printer.

Cleaning interval

► Clean the machine regularly.

The frequency depends on the following factors:

- Operating conditions
- Daily operating duration

Cleaning

CAUTION!
Strong cleaning agents may damage the machine.

► Do not use any cleaning agents or materials that could damage or destroy the paint finish, labelling, type plates, electrical component, etc.
► Do not use any scouring cleaning agents or any cleaning agents that could dissolve plastic.
► Do not use acid or alkaline solutions.

Cleaning agent:

- Compressed air, vacuum cleaner (if available)
- Methylated spirits (ethanol) or isopropyl alcohol

To perform:

► Blow off dust and abrasion with compressed air or remove using a vacuum cleaner (if compressed air or vacuum cleaner is available)

► Dampen a cloth with methylated spirits or isopropyl alcohol and wipe down the machine.

Clean the upper cutter:

If self-adhesive labels are cut from full material, adhesive residues accumulate on the cutter.

CAUTION!
Hard objects will cause damage to the cutter blades!

► Do not clean the cutter blades with sharp objects.

EXPERTS ► Removing the upper cutter for cleaning, see service manual, chapter “Upper cutter”.

EXPERTS ► Clean the lower cutter with the upper cutter removed.

MAINTENANCE

Oiling

Oil the following points now and again with a drop of very fine machine oil (e.g. sewing machine oil) to maintain the proper function of the TCS over a long period of time:

► Add two drops of oil to both sides of the guide profile from above.

Fig. 6: Guides of the cutter slide.

Telephone: +49-8165-925-0 | www.novexx.com

Novexx Solutions GmbH
Ohmstraße 3
85386 Eching
Germany